Verified RealEstate™

REFERENCE
70/2026-27

ISSUED
16 October 2026

PP APPROVAL RECORD

Planning Permission

Survey 116/45A1A2 and 1 more

Valajanagaram

Ariyalur district, Tamil Nadu

APPROVAL TYPE
Building Plan

ISSUING AUTHORITY
Rural Panchayat

The approval as the planning authority issued it, reproduced in full behind this page.

An approval speaks to what was sanctioned, not to what was built. Completion is a separate record.

Verified RealEstate™
3/350/2 Mettukuppam,
OMR Thoraipakkam,
Chennai 600 097, India

hello@verified.realestate
+91 9996 12 9996
verified.realestate

PLAN SHOWING THE EXISTING & EXTENSION OF GROUND FLOOR AND PROPOSED CONSTRUCTION OF FIRST FLOOR R.C.C ROOF RESIDENTIAL BUILDING IN PLOT NO.21, ANATHA NAGAR S.F.No.116/45A1A2, PATTA No. 8616 AT RAVUTHANPATTI VILLAGE, VALAJANAGARAM PANCHAYAT, ARIYALUR TALUK & DISTRICT. NAME OF THE OWNER: Mr.PAZHANISAMY S/O PHACHAMUTHU.

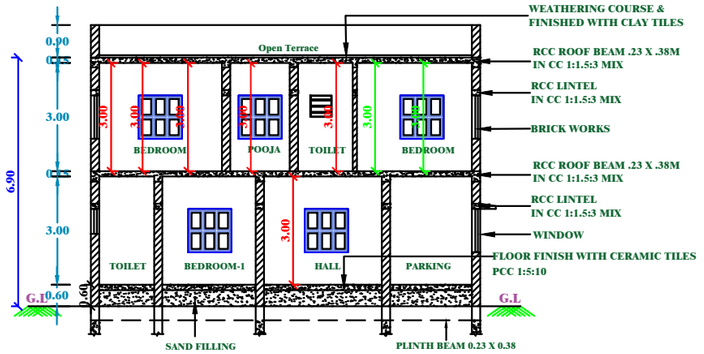

SECTION ON 'X - X'

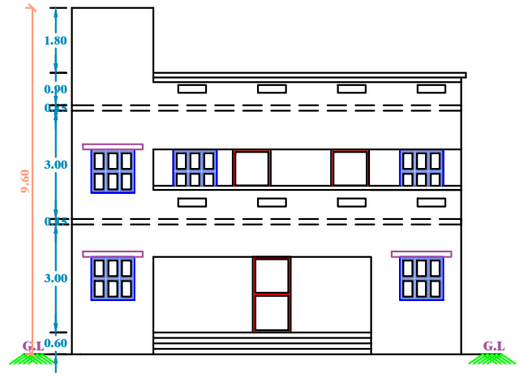

ELEVATION

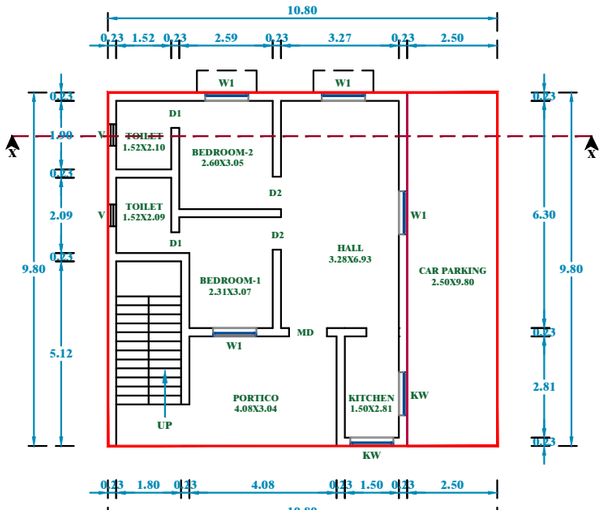

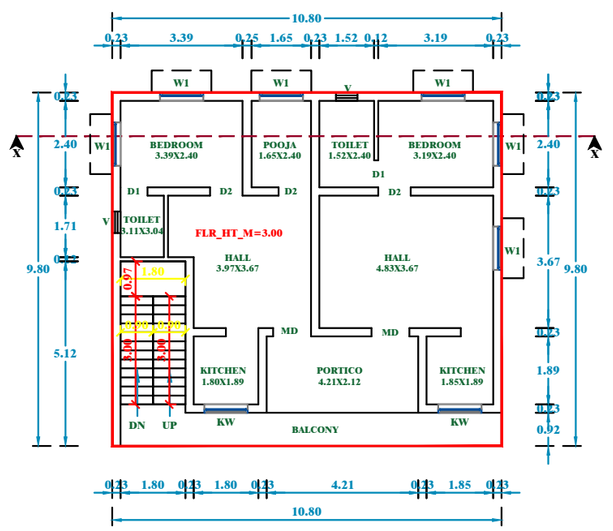

PROPOSED FIRST FLOOR PLAN

SPACE FOR

STAIR

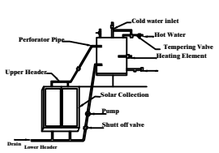

Details Of Solar Water Heater (NTS)

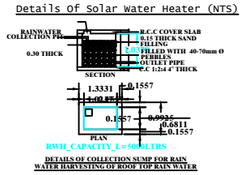

DETAILS OF COLLECTION SUMP FOR RAIN WATER HARVESTING OF ROOF TOP RAIN WATER

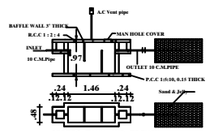

DETAILS

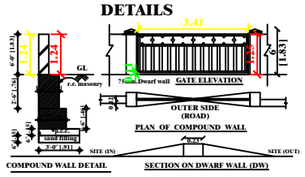

PROPOSED SITE

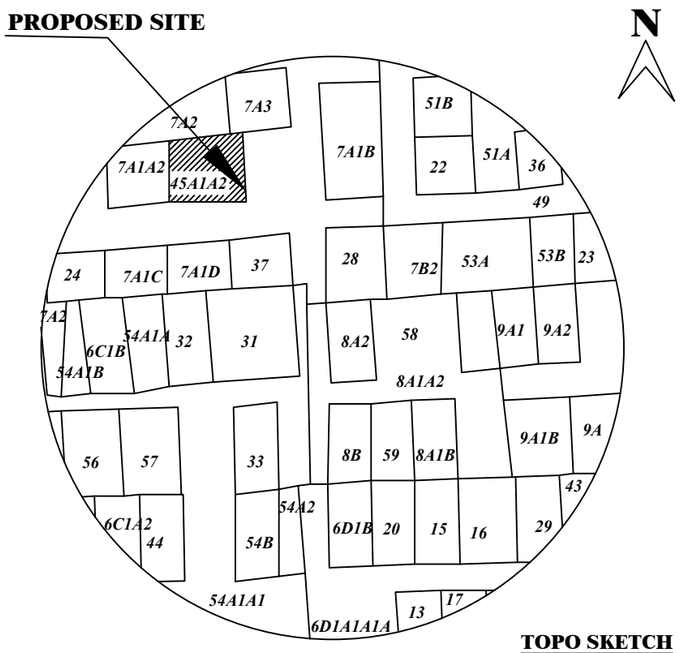

TOPO SKETCH

(Not to Scale)



PLOT NO.14

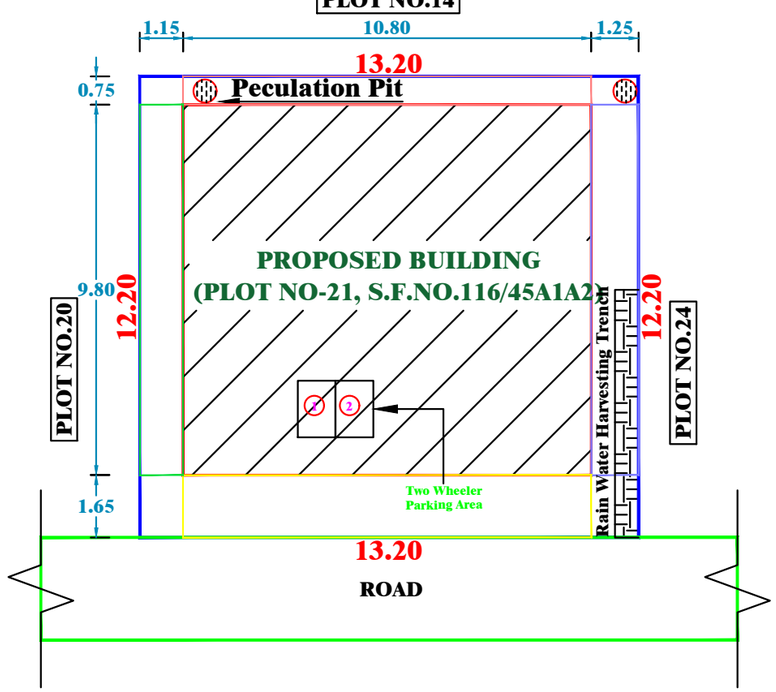

SITE PLAN
(SCALE 1:500)

PLAN_INFO
PLOT_AREA_M2=159.00
SINGLE_FAMILY_BUILDING= NO
ROAD_WIDTH=9M
ROAD_LENGTH=500 M
AREA_TYPE=OTHERS
AVG_PLOT_DEPTH=13.20
AVG_PLOT_WIDTH=12.20
LAND_USE_ZONE=RESIDENTIAL
LEASEHOLD_LAND=NO
SURVEY_NO=116/45A1A2
DISTRICT=ARIYALUR
JURISDICTION_TYPE=PANCHAYAT
OSR_APPLICABLE=NO
PREMIUM_FSI_REQUIRED=NO
IS_APPROVED_LAYOUT=NO
AS_PER_DOCUMENT=159.00
IS_SWIMMING_POOL_EXISTS= NO
IS_PRIVATE_EXCLUSIVE_PASSAGE=NO
PATTA_NO=8616
TALUK=ARIYALUR
AS_AT_SITE=159.00
FMB_OR_PLR=159.00
RWH_DECLARED=YES
IF_HERITAGE_TOWN_LESSTHAN_1KM_RADIUS=NO

SCHEDULE OF JOINERIES

TYPE	DESCRIPTION	SIZE IN METER
MD	MAIN DOOR	1.05 x 2.10
D1	TOILET DOOR	0.75 x 2.10
D2	FLUSH DOOR	0.90 x 2.10
W1	WINDOW	0.90 x 1.20
KW	KITCHEN WINDOW	1.20 x 0.90
V	VENTILATOR	0.60 x 0.60

AREA STATEMENT DETAIL

DESCRIPTION	Sq.M	Sq.Ft
PLOT AREA DETAIL		
FMB AREA	159.00	1711.00
PATTA AREA	159.00	1711.00
DOCUMENT AREA	159.79	1720.00
EXISTING BUILDING AREA DETAIL		
GROUND FLOOR PLINTH AREA	85.89	924.00
TOTAL BUILT-UP AREA	85.89	924.00
PROPOSED BUILDING AREA DETAIL		
GROUND FLOOR EXTENSION AREA	19.95	215.00
FIRST FLOOR PROPOSED AREA	105.84	1139.00
TOTAL PROPOSED BUILD-UP AREA	125.79	1402.00
GRAND TOTAL EXISTING & PROPOSED BUILDUP AREA	211.68	2278.00

F.S.I = TOTAL COVERED AREA IN ALL FLOOR / SITE EXTENT = 211.68 SQ.M / 159.00 Q.M = 1.33

PLOT COVERAGE = MAX. ONE FLOOR AREA / SITE EXTENT X 100 = 105.84 SQ.M / 159.00 SQ.M X 100 = 66.56 %

ALL DIMENSION ARE IN METTER

PARKING

1. TWO WHEELER PARKING SPACE 2 NOS PROVIDED.
2. CAR PARKING SPACE NOT PROVIDED.

NOTES:

1. FIRE EXTINGUISHER ⊕FE
2. ALL DIMENSION ARE IN METER
3. SCALE - 1:100
4. WASTE WATER UTILISED FOR GARDEN PURPOSE.
5. SOLAR WATER HEATER PROVIDED IN TERRACE FLOOR.

COLOUR INDEX:

BOUNDARY SHOWN IN BLUE -
PROPOSED BUILDING IN RED -
ROAD SHOWING IN GREEN -

APPLICANT

Er.E.ARUL M.Tech.,(Structural)
Registered Engineer Grade-I(DTCP)
Reg.No.: RE(Gr-1)/ALR/JULY2020/005
1st Floor, Saromani Complex, Near Venkadeshwara Hotel
Sendurai Road, Ariyalur - 621704
Cell:9080364023 / 9585065495

REGISTERED ENGINEER

THE LANDLENS SUITE

Eight ways to know a piece of land before you pay for it.

This report covers one part of the picture. These cover the rest, drawn from the same government records, for any property in Tamil Nadu.

LandLens One
Ask anything about a property and get an answer grounded in live government records, with the sources shown.
/landlens/one

Verify My Land
Every record check run on one property and returned as a single report.
/landlens/verify-my-land

Legal Opinion
An advocate's written opinion on the title, built on the records we pull for it.
/landlens

One Map
Every layer on one map: the parcel, its boundary, zoning, water bodies and what sits around it.
/landlens/one/map

PriceMap
What land actually changed hands for around this plot, taken from the registered deeds.
/landlens/pricemap

Build Scope
What you are allowed to build here: floor space, height, coverage and setbacks.
/landlens/build-scope

Property Tracker
Watch a property and hear about it when something new is registered against it.
/landlens/property-tracker

Deal Room
Run the transaction in one place: documents, stamping, signatures and the parties.
/landlens/deal-room

FREE TOOLS · NO ACCOUNT NEEDED

Twenty-four checks you can run yourself, at no cost.

Records and verification

The registers themselves, read for you.

- Encumbrance Certificate
- Patta and Chitta
- Field Measurement Sketch
- EC Analyzer
- Bank charge check
- Court case search
- Seller background check
- Approval check by survey

Value and duty

What it is worth and what it costs to register.

- Guideline value by street
- Guideline value by survey
- Stamp duty and registration fees
- Capital gains
- Floor space index
- Area unit converter

Zoning and land use

What the plan says can happen on this land.

- Land use zone finder
- CMDA land use check
- Coastal regulation zone
- Master plan check
- Water bodies finder
- Airport height clearance

Registers and directories

Who holds it, and which office keeps the record.

- Find your registering office
- Temple property check
- Waqf property check
- RERA register

Every free tool
/tools

Services we run for you
/services

The LandLens suite
/landlens/one

Verified RealEstate™

Every claim in this document traces back to a government record.

- Legal opinions, due diligence and title verification
- Building plan, layout and sub-division approvals
- Completion and occupancy certificates, regularisation
- Escrow, negotiation and NRI property management
- Land survey, soil testing, architecture and construction

Verified RealEstate
3/350/2 Mettukuppam,
OMR Thoraipakkam,
Chennai 600 097, India
hello@verified.realestate
+91 9996 12 9996

Prepared from the registers named on the page each finding sits on. Where a register could not be read, this document says so in its place rather than leaving the gap to be read as a clean result.