PP APPROVAL RECORD

Planning Permission

Survey 543/5 and 1 more

Eluppaiyur

Ariyalur district, Tamil Nadu

APPROVAL TYPE
Building Plan

ISSUING AUTHORITY
Rural Panchayat

The approval as the planning authority issued it, reproduced in full behind this page.

An approval speaks to what was sanctioned, not to what was built. Completion is a separate record.

PLAN SHOWING THE PROPOSED CONSTRUCTION OF GROUND FLOOR & PART OF FIRST FLOOR R.C.C ROOF RESIDENTIAL BUILDING IN S.F.NO.543/5, PATTA NO. 760 AT POYYAATHANALLUR VILLAGE, ELUPPAIYUR PANCHAYAT, ARIYALUR TALUK & DISTRICT.

NAME OF THE OWNER: Mr. CHINNAPPA S/O KULANTHAIVELU.

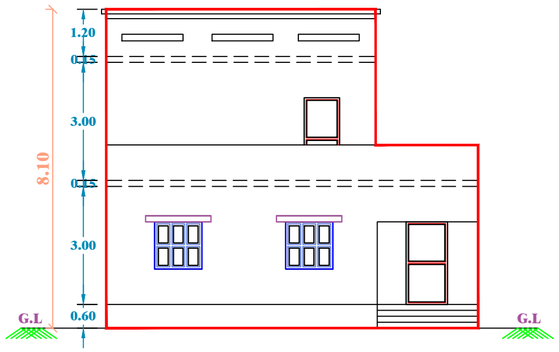

ELEVATION

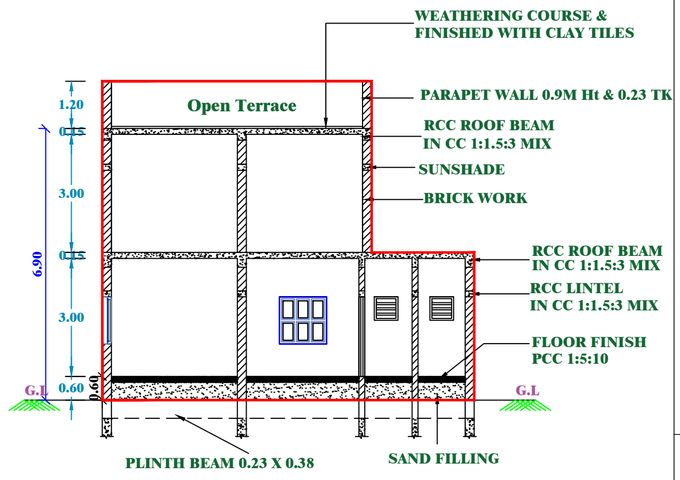

SECTION ON 'A - A'

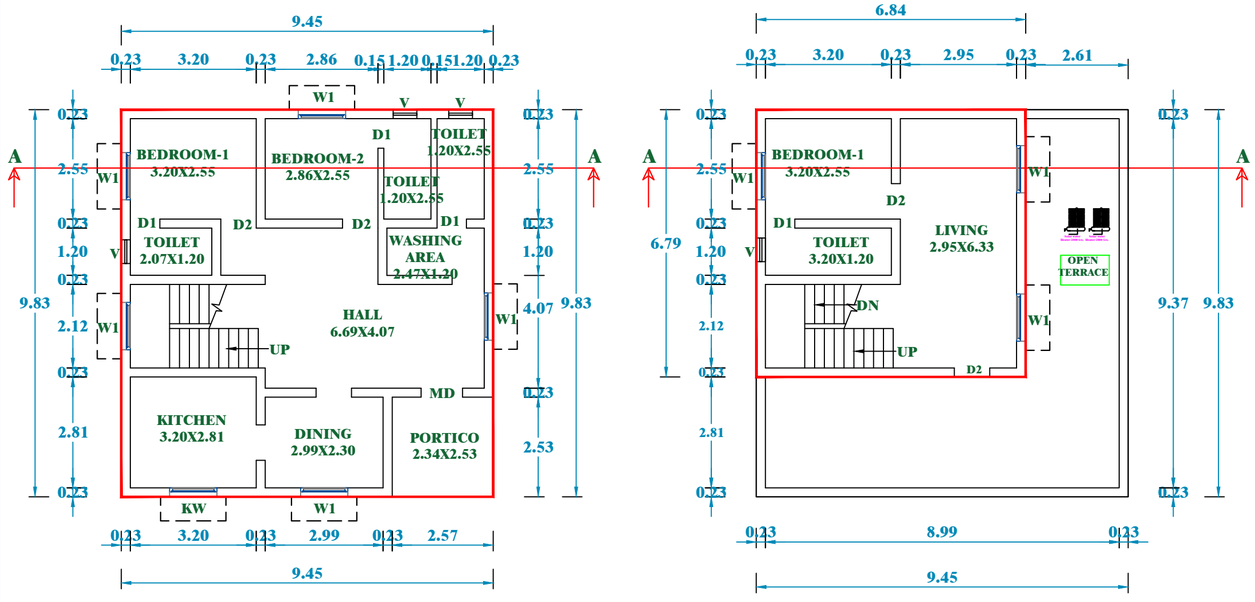

GROUND FLOOR PLAN

FIRST FLOOR PLAN



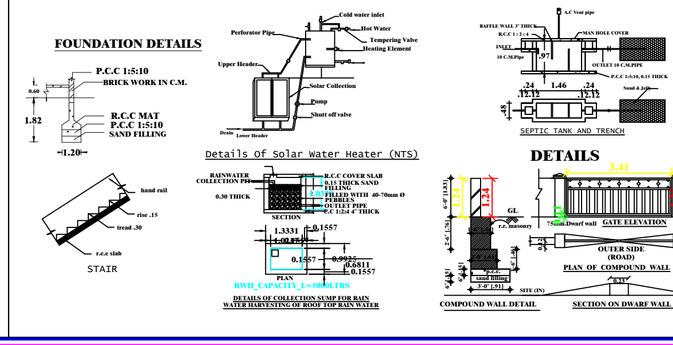

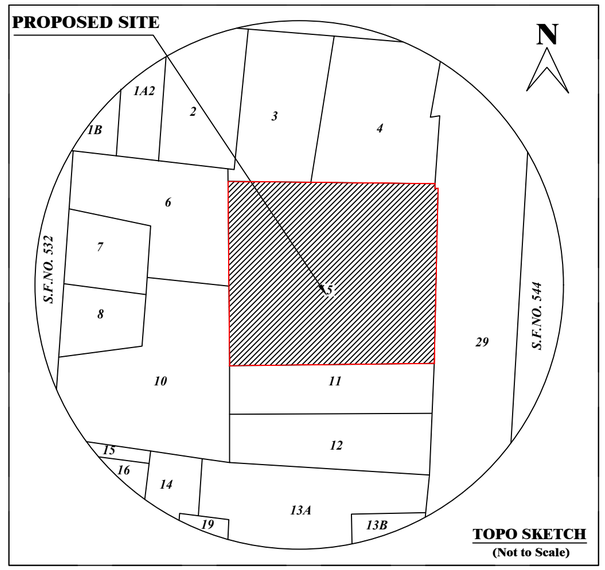



THANGAVEL UDAIYAR EMPTY PLOT

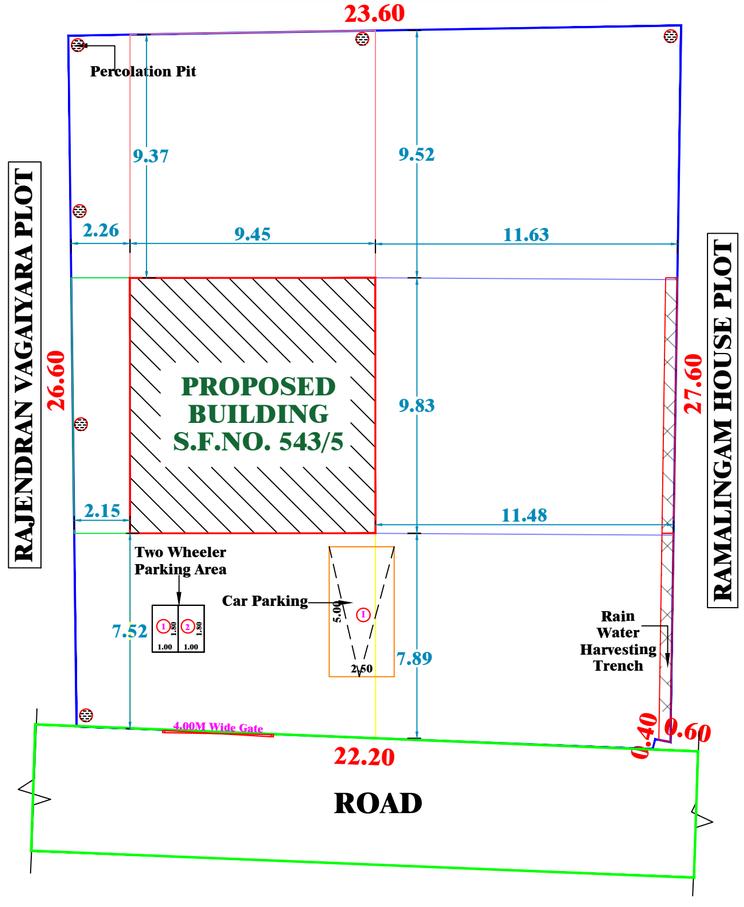

SITE PLAN (SCALE 1:500)

PLAN_INFO
PLOT_AREA_M2=633.00
SINGLE_FAMILY_BLDG=YES
ROAD_WIDTH=9M
ROAD_LENGTH=500 M
AREA_TYPE=OTHERS
AVG_PLOT_DEPTH=27.32
AVG_PLOT_WIDTH=23.20
LAND_USE_ZONE=RESIDENTIAL
LEASEHOLD_LAND=NO
SURVEY_NO=543/5
DISTRICT=ARIYALUR
JURISDICTION_TYPE=PANCHAYAT
OSR_APPLICABLE=NO
PREMIUM_FSI_REQUIRED=NO
IS_APPROVED_LAYOUT=NO
AS_PER_DOCUMENT=633.00
IS_SWIMMING_POOL_EXISTS= NO
IS_PRIVATE_EXCLUSIVE_PASSAGE=NO
PATTA_NO=760
TALUK=ARIYALUR
AS_AT_SITE=633.00
FMB_OR_PLR=633.00
RWH_DECLARED=YES
IF_HERITAGE_TOWN_LESSTHAN_1KM_RADIUS=NO

SCHEDULE OF JOINERIES

TYPE	DESCRIPTION	SIZE IN METER
MD	MAIN DOOR	1.05 x 2.10
D1	TOILET DOOR	0.75 x 2.10
D2	FLUSH DOOR	0.90 x 2.10
W1	WINDOW	0.90 x 1.20
KW	KITCHEN WINDOW	0.90 x 1.20
V	VENTILATOR	0.60 x 0.60

AREA DETAILS

PLOT AREA DETAIL	Sq.M	Sq.Ft
AS PER SITE	633.00	6814.00
AS PER DOCUMENT	633.00	6814.00
AS PER FMB	633.00	6814.00
SUPER IMPOSED AREA	633.00	6814.00

BUILDING AREA DETAILS

PROPOSED BUILDING

Ground Floor : Plinth Area	92.94	1000.00
First Floor : Plinth Area	46.47	500.00
Total Built Up Area	139.41	1500.00

PLOT COVERAGE = 92.94 / 633.00 X 100 = 14.68%

F.S.I = 139.41 / 633.00 = 0.22

PARKING

1. TWO WHEELER PARKING SPACE 2 NO. PROVIDED.
2. CAR PARKING SPACE 1 NO. PROVIDED.

NOTES:

1. FIRE EXTINGUISHER ⊛FE
2. ALL DIMENSION ARE IN METER
3. SCALE - 1:100
4. WASTE WATER UTILISED FOR GARDEN PURPOSE.
5. SOLAR WATER HEATER PROVIDED IN TERRACE FLOOR.

COLOUR INDEX:

BOUNDARY SHOWN IN BLUE -
PROPOSED BUILDING IN RED -
PRIVATE PASSAGE IN GREEN -

Mr. CHINNAPPA . K
APPLICANT

Er.E.ARUL M.Tech.,(Structural)
Registered Engineer Grade-I(DTCP)
Reg.No.: RE(Gr-I)-ALR/JULY2026/005
1st Floor, Saromani Complex, Near Venkadeshwara Hotel
Sendurai Road. Ariyalur - 621704.
Cell:9080364023 / 9585065495

REGISTERED ENGINEER

THE LANDLENS SUITE

Eight ways to know a piece of land before you pay for it.

This report covers one part of the picture. These cover the rest, drawn from the same government records, for any property in Tamil Nadu.

LandLens One
Ask anything about a property and get an answer grounded in live government records, with the sources shown.
/landlens/one

Verify My Land
Every record check run on one property and returned as a single report.
/landlens/verify-my-land

Legal Opinion
An advocate's written opinion on the title, built on the records we pull for it.
/landlens

One Map
Every layer on one map: the parcel, its boundary, zoning, water bodies and what sits around it.
/landlens/one/map

PriceMap
What land actually changed hands for around this plot, taken from the registered deeds.
/landlens/pricemap

Build Scope
What you are allowed to build here: floor space, height, coverage and setbacks.
/landlens/build-scope

Property Tracker
Watch a property and hear about it when something new is registered against it.
/landlens/property-tracker

Deal Room
Run the transaction in one place: documents, stamping, signatures and the parties.
/landlens/deal-room

FREE TOOLS · NO ACCOUNT NEEDED

Twenty-four checks you can run yourself, at no cost.

Records and verification

The registers themselves, read for you.

- Encumbrance Certificate
- Patta and Chitta
- Field Measurement Sketch
- EC Analyzer
- Bank charge check
- Court case search
- Seller background check
- Approval check by survey

Value and duty

What it is worth and what it costs to register.

- Guideline value by street
- Guideline value by survey
- Stamp duty and registration fees
- Capital gains
- Floor space index
- Area unit converter

Zoning and land use

What the plan says can happen on this land.

- Land use zone finder
- CMDA land use check
- Coastal regulation zone
- Master plan check
- Water bodies finder
- Airport height clearance

Registers and directories

Who holds it, and which office keeps the record.

- Find your registering office
- Temple property check
- Waqf property check
- RERA register

Every free tool
/tools

Services we run for you
/services

The LandLens suite
/landlens/one

Verified RealEstate™

Every claim in this document traces back to a government record.

- Legal opinions, due diligence and title verification
- Building plan, layout and sub-division approvals
- Completion and occupancy certificates, regularisation
- Escrow, negotiation and NRI property management
- Land survey, soil testing, architecture and construction

Verified RealEstate
3/350/2 Mettukuppam,
OMR Thoraipakkam,
Chennai 600 097, India
hello@verified.realestate
+91 9996 12 9996

Prepared from the registers named on the page each finding sits on. Where a register could not be read, this document says so in its place rather than leaving the gap to be read as a clean result.