Verified RealEstate™

REFERENCE
SWP/BPA/009976/2023

ISSUED
14 June 2023

PP APPROVAL RECORD

Planning Permission

Chengalpattu

Chengalpattu district, Tamil Nadu

APPROVAL TYPE
Building Plan

ISSUING AUTHORITY
DTCP

The approval as the planning authority issued it, reproduced in full behind this page.

An approval speaks to what was sanctioned, not to what was built. Completion is a separate record.

Verified RealEstate™
3/350/2 Mettukuppam,
OMR Thoraipakkam,
Chennai 600 097, India

hello@verified.realestate
+91 9996 12 9996
verified.realestate

DIGITALLY VERIFIED RECORD

SHEET No. 1/2

PLAN SHOWING THE PROPOSED CONSTRUCTION OF A INDUSTRIAL BUILDING AT S.No. 26/1D; 27/2,3C; 28/2,3, UNAMALAI VILLAGE, MADURANTAKAM TALUK, CHENGALPATTU DISTRICT.

Category :- Orange
Manufacturing :- Granite Industry except Quarrying
Annexure - VII :- Sl.No.32

ALL DIMENISIONS ARE IN METRES | *SCALE 1:100*

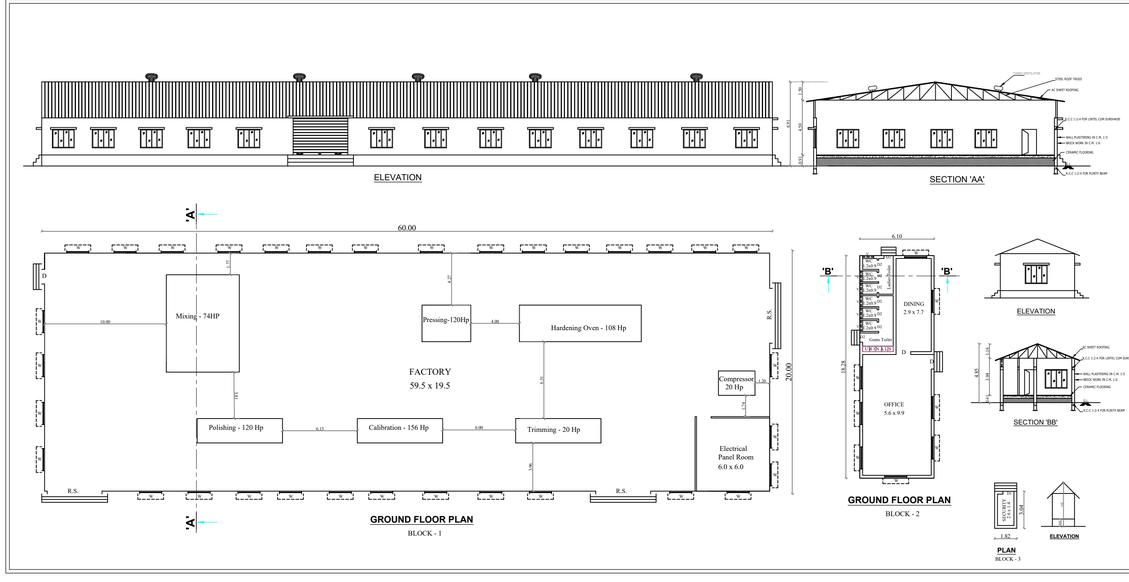

SCHEDULE OF JOINERY

R.S.	ROLLING SHUTTER	14'0" X 10'0"	[4.50 X 3.00]
D	DOOR	4'0" X 7'0"	[1.20 X 2.13]
D1	DOOR	3'0" X 7'0"	[0.91 X 2.13]
D2	DOOR	2'6" X 7'0"	[0.76 X 2.13]
W	WINDOW	6'0" X 5'0"	[1.80 X 1.52]
V	VENTILATOR	2'0" X 2'0"	[0.91 X 0.61]

COLOUR INDEX

- PROPOSED BUILDING
- EXISTING ROAD
- PLOT BOUNDARY
- DRIVEWAY

NORTH POINT

SPECIFICATION

FOUNDATION:
FOUNDATION, AND BASEMENT IN RCC COLUMN AND PLINTH BEAM OVER A BED OF RCC 1-6-8, 6THICK AS PER STRUCTURAL DETAILS.
SUPER STRUCTURE:
WALLS 230THICK AND 2N23 TH, ,115TH COUNTRY BURNT BRICK WALLS WITH CEMENT MORTOR 1:5
SLC MEMBERS:
EXISTING , COLUMNS, PLINTH BEAMS ,LINTEL,SUNSHADE, FLOOR, ROOF BEAMS, SLABS & STAIRS IN RCC 1:1:3:2 USING 20MM NOMINAL SIZE BROKEN STONES.
PLASTERING:
WALLS INSIDE & OUTSIDE IN CM 1:5, 12mm TH,CEILING IN CM 1:3 6mm TH.
PAINTING:
SMOKING THE WALL , CEILING WITH CEMENT PAINT OVER A PRIMING COAT
FLOORING:
PREPARING THE FLOOR WITH 20 TH GRANO FLOORING OVER A BED OF PCC 1-4-8 6TTH.
DOORS AND WINDOWS:
DOORS WITH PRESSED ENTRY WOODEN FRAMES, 32 TH, PLUSH DOOR SHUTTERS, SS FASTENINGS, SUPER WHITE FINISH.
WINDOWS WITH PRESSED ANODISED ALUPONDEUM OPENABLE SHUTTERS WITH 4 mm GLASS & STANDARD FASTENING

OWNER'S SIGNATURE

STRUCTURAL ENGINEER

For SRI JANAKI & ASSOCIATES

ARCHITECT SIGNATURE

SHEET No. 2/2

PLAN SHOWING THE PROPOSED CONSTRUCTION OF A INDUSTRIAL BUILDING AT S.No. 26/1D; 27/2,3C; 28/2,3, UNAMALAI VILLAGE, MADURANTAKAM TALUK, CHENGALPATTU DISTRICT.

Category :- Orange
Manufacturing :- Granite Industry except Quarrying
Annexure - VII :- Sl.No.32

ALL DIMENISIONS ARE IN METRES | *SCALE 1:100*

COLOUR INDEX

- PROPOSED BUILDING
- EXISTING ROAD
- PLOT BOUNDARY
- DRIVEWAY

NOTE

MECHANICAL VENTILATION PROVIDED
FIRE EXTINGUISHERS PROVIDED

AREA DETAILS

PLOT AREA : 10450.00 [SQ.MT.]

SL.NO	DESCRIPTION	NON FSI AREA IN Sq m	FSI AREA IN Sq m	TOTAL BUILTUP AREA IN Sq m
1.	**FACTORY BUILDING**			
	GROUND FLOOR	-	1200.00	1200.00
2.	**OFFICE BUILDING**			
	GROUND FLOOR	-	111.50	111.50
3.	**SECURITY ROOM**			
	GROUND FLOOR	-	5.53	5.53
	TOTAL	-	1317.03	1317.03

DESCRIPTION	CALCULATION	PERMISSIBLE MAX FSI	PROPOSED
FLOOR SPACE INDEX	1317.03 / 10450.00	1.5	0.12

PARKING DETAILS

	REQUIRED	PROVIDED
LORRY PARKING	3 No's	3 No's
CAR PARKING	2 No's	2 No's
TWO WHEELER PARKING	27 No's	27 No's
CYCLE PARKING	27 No's	27 No's

OSR DETAILS

OSR PROVIDED
1053.64Sq.M [10.08%]

HP DETAILS

Total HP - 618 HP

WORKERS DETAILS

MALE - 40 No's
FEMALE - 10 No's
TOTAL - 50 No's

SANITATION DETAILS

i] Ladies Toilet => Wc - 3 Nos
ii] Gents Toilet => Wc - 3 Nos
Urinals - 5 Nos

For LUSTRO SURFACES PRIVATE LIMITED
Director

OWNER'S SIGNATURE

Er. R.JOSEPH,B.Tech.,M.Tech.,
Structural Engineer Grade - I (SE)
Reg. No. 17-01/Ms/ar 85/GR-I/2015/06934
No. 6-474, Kamban Nagar, Motor Street,
Chengalpattu - 603 001.
Mob: 98602 49001
Email: Joe9714@gmail.com

STRUCTURAL ENGINEER

For SRI JANAKI & ASSOCIATES
N. JAYARAMAN M.Arch.,A.R.I.B.A.,M.E.P.M.P.Kgal.A.I.P
LICENSED SURVEYOR / REGISTERED ARCHITECT
No: 84-B, Rajaji Street, Chengalpattu-603 001
Mobr: +91 944 12 35706 , (P.O: 044-27432650 / 20740
Email: janaki@yahoo.com
Reg. No: CA/99/24015 - ITPI 2001 - 058, IIA, A15617
Reg. No: COURSN / RA / Gr-I / 2019 / 04 / 002

ARCHITECT SIGNATURE

BUILDING TECHNICAL APPROVAL
ROC NO. : SWP/BPA/009976/2023
SITE BOUNDARY SHOWN AS "A - O"
INDUSTRIAL BUILDING TECHNICAL APPROVAL
தொ.வ/ந.ஊ.உ.இ(செ.மா)எண்:16/2023

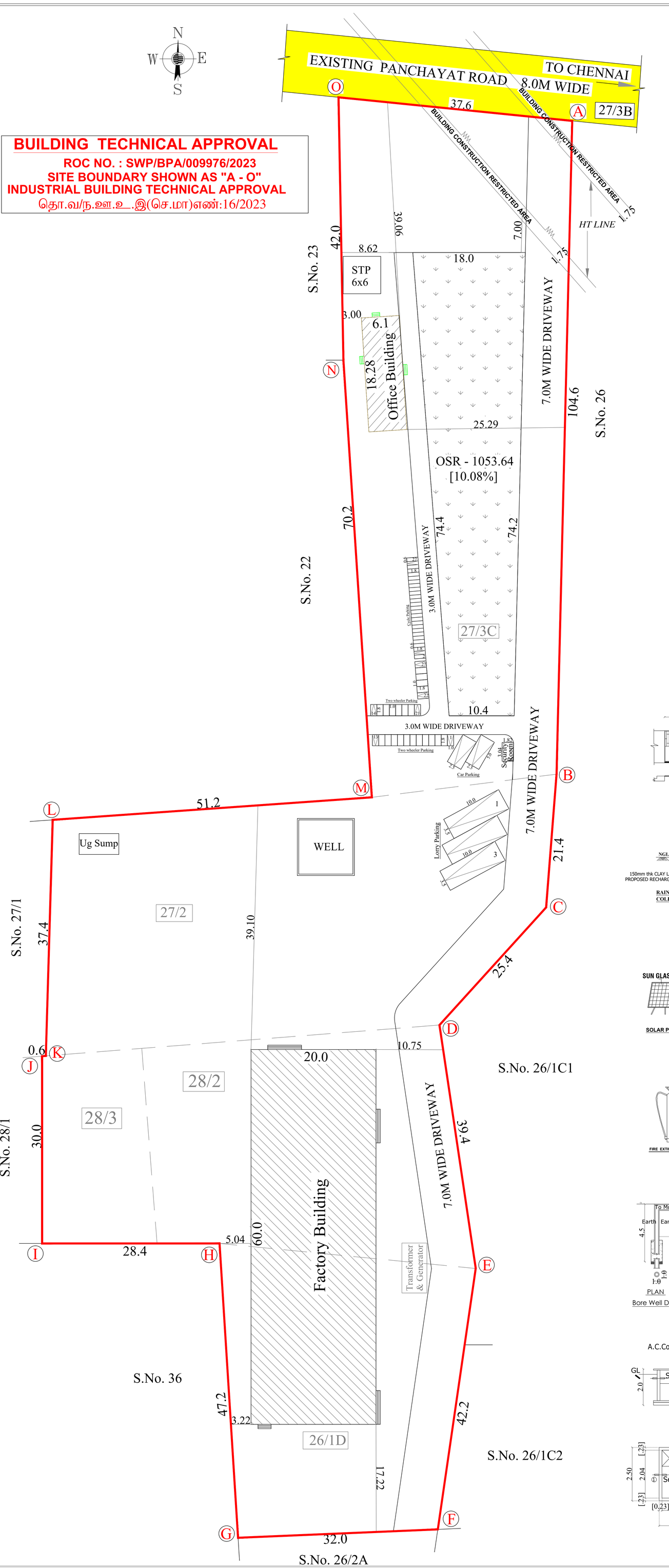

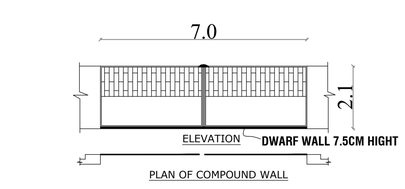

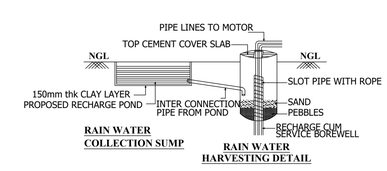

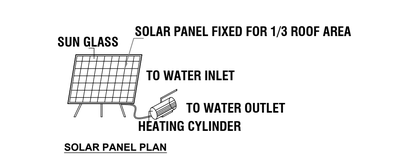

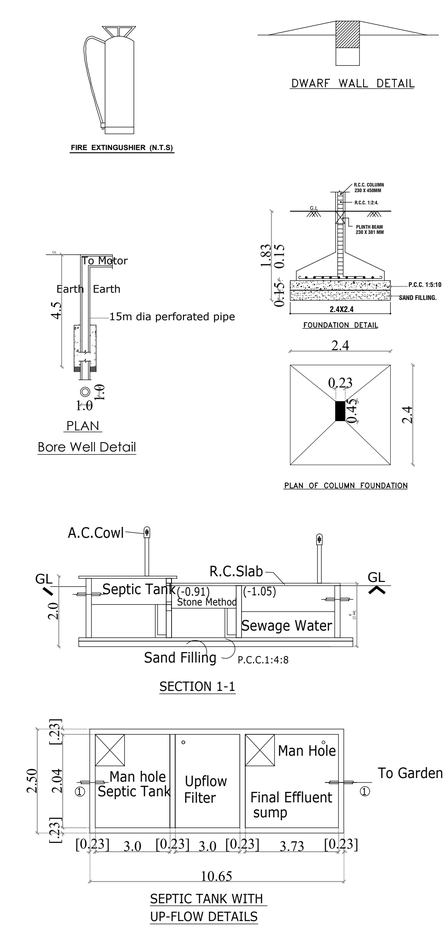

THE LANDLENS SUITE

Eight ways to know a piece of land before you pay for it.

This report covers one part of the picture. These cover the rest, drawn from the same government records, for any property in Tamil Nadu.

LandLens One
Ask anything about a property and get an answer grounded in live government records, with the sources shown.
/landlens/one

Verify My Land
Every record check run on one property and returned as a single report.
/landlens/verify-my-land

Legal Opinion
An advocate's written opinion on the title, built on the records we pull for it.
/landlens

One Map
Every layer on one map: the parcel, its boundary, zoning, water bodies and what sits around it.
/landlens/one/map

PriceMap
What land actually changed hands for around this plot, taken from the registered deeds.
/landlens/pricemap

Build Scope
What you are allowed to build here: floor space, height, coverage and setbacks.
/landlens/build-scope

Property Tracker
Watch a property and hear about it when something new is registered against it.
/landlens/property-tracker

Deal Room
Run the transaction in one place: documents, stamping, signatures and the parties.
/landlens/deal-room

hello@verified.realestate · +91 9996 12 9996

FREE TOOLS · NO ACCOUNT NEEDED

Twenty-four checks you can run yourself, at no cost.

Records and verification

The registers themselves, read for you.

- Encumbrance Certificate
- Patta and Chitta
- Field Measurement Sketch
- EC Analyzer
- Bank charge check
- Court case search
- Seller background check
- Approval check by survey

Value and duty

What it is worth and what it costs to register.

- Guideline value by street
- Guideline value by survey
- Stamp duty and registration fees
- Capital gains
- Floor space index
- Area unit converter

Zoning and land use

What the plan says can happen on this land.

- Land use zone finder
- CMDA land use check
- Coastal regulation zone
- Master plan check
- Water bodies finder
- Airport height clearance

Registers and directories

Who holds it, and which office keeps the record.

- Find your registering office
- Temple property check
- Waqf property check
- RERA register

Every free tool
/tools

Services we run for you
/services

The LandLens suite
/landlens/one

Verified RealEstate™

Every claim in this document traces back to a government record.

- Legal opinions, due diligence and title verification
- Building plan, layout and sub-division approvals
- Completion and occupancy certificates, regularisation
- Escrow, negotiation and NRI property management
- Land survey, soil testing, architecture and construction

Verified RealEstate
3/350/2 Mettukuppam,
OMR Thoraipakkam,
Chennai 600 097, India
hello@verified.realestate
+91 9996 12 9996

Prepared from the registers named on the page each finding sits on. Where a register could not be read, this document says so in its place rather than leaving the gap to be read as a clean result.