PP APPROVAL RECORD

Planning Permission

Chengalpattu district, Tamil Nadu

APPROVAL TYPE
Building Plan

ISSUING AUTHORITY
DTCP

The approval as the planning authority issued it, reproduced in full behind this page.

An approval speaks to what was sanctioned, not to what was built. Completion is a separate record.

Verified RealEstate™
3/350/2 Mettukuppam,
OMR Thoraipakkam,
Chennai 600 097, India

hello@verified.realestate
+91 9996 12 9996
verified.realestate

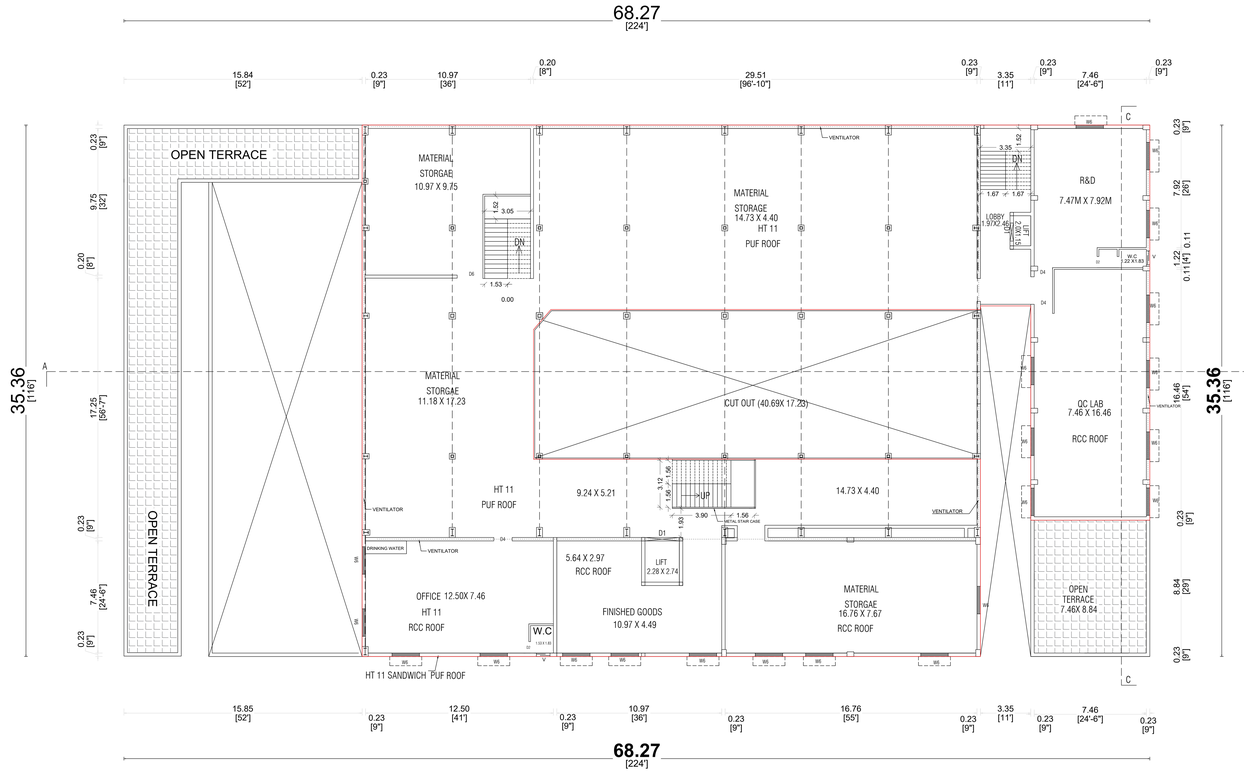

PROPOSED FIRST FLOOR PLAN

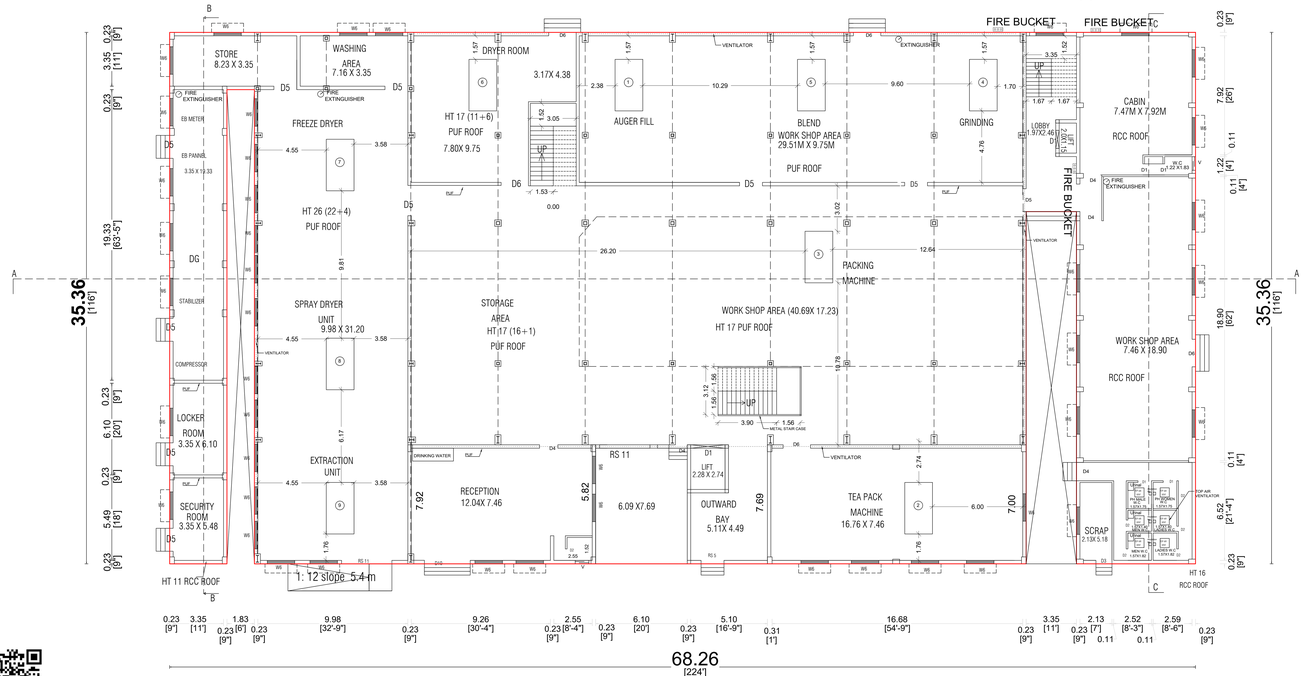

PROPOSED GROUND FLOOR PLAN

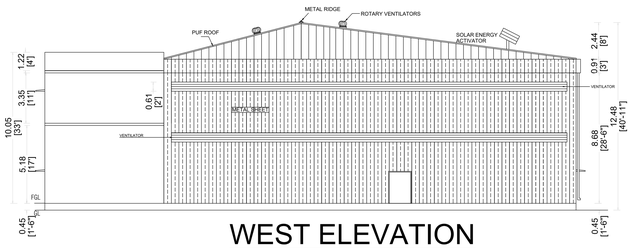

WEST ELEVATION

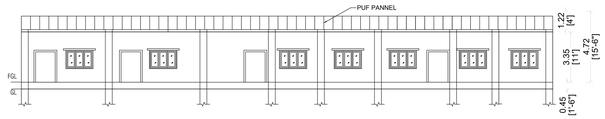

SECTION-"BB"

(STORE, EB , SECURITY & LOCKER ROOM)

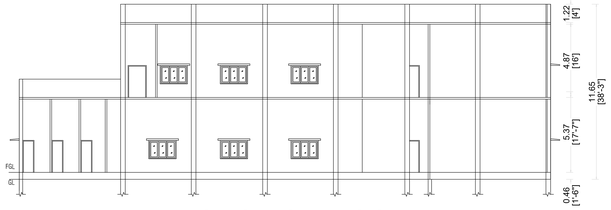

SECTION- "CC"

(WORKSHOP , TOILET & CABIN)

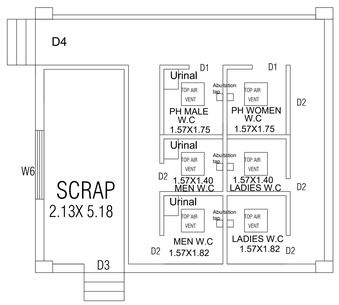

PROPOSED WATER CLOSET DRAWING (NOT TO SCALE)

BUILDING TECHNICAL APPROVAL:
ONLINE SWP APPLICATION NO: SWP/BPA/0782487/2026
SCRUNITY REFERENCE NO: IBYVOMV4
SITE BOUNDARY SHWN AS "A-J"

INDUSTRIAL TECHNICAL APPROVAL
SWP/INDUSTRIAL Building/ A.D./D.T.C.P (CD3) NO.17/2026

PLAN SHOWING THE PROPOSED CONSTRUCTION OF INDUSTRIAL BUILDING COMPRISED IN PLOT NO.241,242,243 & 244, IN SURVEY NO.124/29 PART, IN SIDCO INDUSTRIAL ESTATE (D.T.C.P. APPROVAL NO.136/2023), KODUR VILLAGE & PANCHAYAT, CHEYYUR TALUK CHENGALPATTU DISTRICT.

SHEET: 1 of 3

S E W N

APPLICANT NAME: M/s. GTEE SCINAGRO PROCESSING PRIVATE LIMITED

SCALE 1: 100

CATEGORY OF INDUSTRY: "ORANGE"
MANUFACTURING DETAILS:-
FOOD AND FOOD PROCESSING INCLUDING FRUITS AND VEGETABLE PROCESSING (AS PER G.O.(Ms.) NO.154 DATED 07.10.2025, ANNEXURE VII- S.NO.7)

DRAWING TITLE:
PROPOSED GROUND FLOOR & FIRST FLOOR PLAN DRAWING

NOTE : ALL DIMENSIONS AREA IN METRE

AREA STATEMENT DETAILS

SITE AREA AS PER FMB : 3979.76 SQ.M
SITE AREA AS PER DOCUMENT : 3979.76 SQ.M
(Numbered as A to J)

PROPOSED BUILTUP AREA DETAILS :

S.NO	DESCRIPTION	FSI (SQ.M)	NON-FSI (SQ.M)	TOTAL (SQ.M)
1	BLOCK -1 (INDUSTRIAL)			
(i)	GROUND FLOOR	2266.81	-	2266.81
(ii)	FIRST FLOOR	1408.20	-	1408.20
2	TOTAL	3675.01	-	3675.01

TOTAL FSI AREA = 3675.01
FLOOR SPACE INDEX = 3675.01 / 3979.76 = 0.92

PARKING CALCULATION :

LORRY PARKING(Factory Area) - 3675.01 SQ.M/750 SQ.M = 4.90 Nos
CAR PARKING(OFFICE Area) - 11.42 SQ.M/150 SQ.M = 0.07 Nos
TWO WHEELER PARKING(Production Area)- 3675.01 SQ.M/75 SQ.M = 49.00 Nos
CYCLE PARKING(Production Area) - 3675.01 SQ.M/75 SQ.M = 49.00 Nos

DESCRIPTION	REQUIRED	PROVIDED
LORRY PARKING	5 NOS	5 NOS
EV CHARGING CAR PARKING	1 NOS	1 NOS
EV CHARGING TWO WHEELER	5 NOS	5 NOS
TWO WHEELER PARKING	49 NOS	55 NOS
PH-TWO WHEELER PARKING	5 NOS	5 NOS
CYCLE PARKING	49 NOS	50 NOS

COLOUR INDEX :

PROPOSED
BOUNDARY
ROAD
DRIVEWAY

REFERENCE :

SANITATION REQUIREMENTS

DESCRIPTION	REQUIRED		PROVIDED	
	MALE	FEMALE	MALE	FEMALE
WATER CLOSET With ABULTION TAP	1	2	2	2
PH WATER CLOSET	1	1	1	1
URINAL	1	-	2	-
DRINKING WATER FOUNTAIN	1	1	1	1
EMERGENCY SHOWER EYE WATER FOUNTAIN	1		1	

WORKER DETAILS :-

PROPOSED Nos OF WORKERS - 30, (Male - 10 Nos) & (Female-20 Nos)

JOINERY SCHEDULE

D1	0.90x2.13m	DOOR	RS 5	1.52x3.05m	ROLLING SHUTTER
D2	0.760x2.13m	DOOR	RS 11	3.35x5.0m	ROLLING SHUTTER
D4	1.22x2.13m	DOOR	W6	1.82x1.22m	WINDOW
D5	1.52x2.13m	DOOR	V1	0.91x0.91m	VENTILATOR
D6	1.83x2.13m	DOOR	INDUCED DRAUGHT ROTARY TURBO MECHANICAL VENTILATOR PROVIDED		

NOTE: ALL ROOMS MECHANICAL VENTILATION PROVIDED

MACHINERY DETAILS :

ITEM NO	NAME OF MACHINERY	QTY	H.P. DETAILS	TOTAL H.P
1	AUGER FILL MACHINE	1	2.68 HP	2.68 HP
2	TEA PACK MACHINE	1	4.02 HP	4.02 HP
3	PACKING MACHINE	1	15.01HP	15.01HP
4	GRINDING MACHINE	1	7.51 HP	7.51 HP
5	BLENDING MACHINE	1	4.02 HP	4.02 HP
6	DRYER MACHINE	1	20.11 HP	20.11 HP
7	FREEZE DRYER	1	20.11 HP	20.11 HP
8	SPRAY BRYER	1	26.81 HP	26.81 HP
9	EXTRACTION UNIT	1	24.13 HP	24.13 HP
	TOTAL			124.40 HP

SPECIFICATIONS:

FOUNDATION : Using R.C.C in M30(footing) upto 2.40m deep
Super Structure : R.C.C Framed structure in M25 Concrete, Brick Work in C.M 1:5 Pre Engg. Building.
Roof : R.C.C in M25 Grade/ Galvalume Roof.
Flooring : Vacuum Dewatered/ Marble/ Granite/ Kota Flooring.
Finishes : Interior and exterior in emulsion paint over cement Plastering.
Weathering course : Using brick Jelly lime concrete and a layer of Weathering tiles.

For Gtee Scinagro Processing Private Limited
Managing Director

APPLICANT SIGNATURE :-

Er. S. RAMESH, B.E.,
Registered Engineer Grade II (RE)
Reg. No : RE-II/TVLR/01/2020

REGISTERED ENGINEER SIGNATURE :-

A.RAJAN, ME.,(STRUCTURE)
REGISTERED GRADE-1
DTCP STRUCTURAL ENGINEER
REG.No. CGLDIST/SE/Gr-1/2023/10/007
BSC CONSULTANTS
KODUNGAIYUR, CHENNAI-118.
MOB.: +91-88070 78990

STRUCTURAL ENGINEER SIGNATURE :-

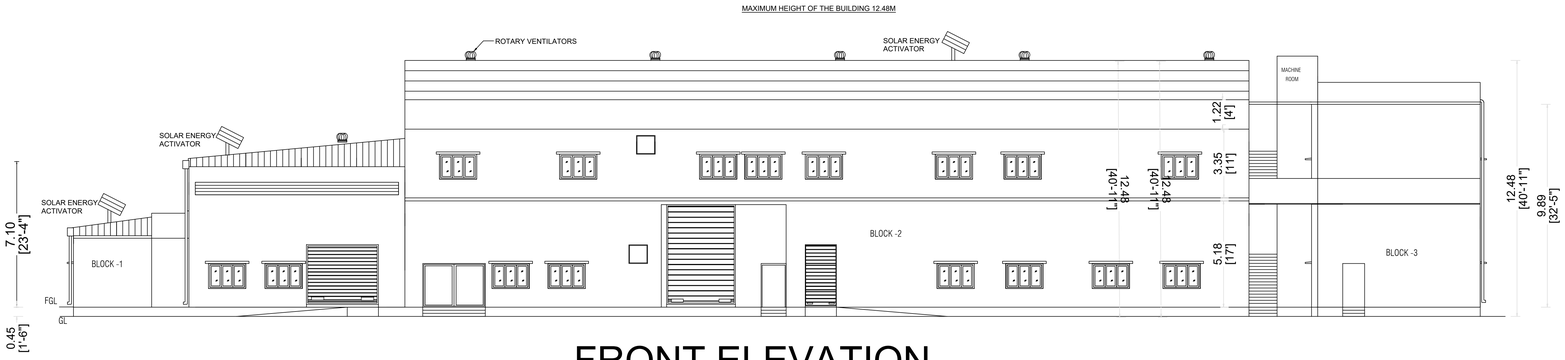

FRONT ELEVATION

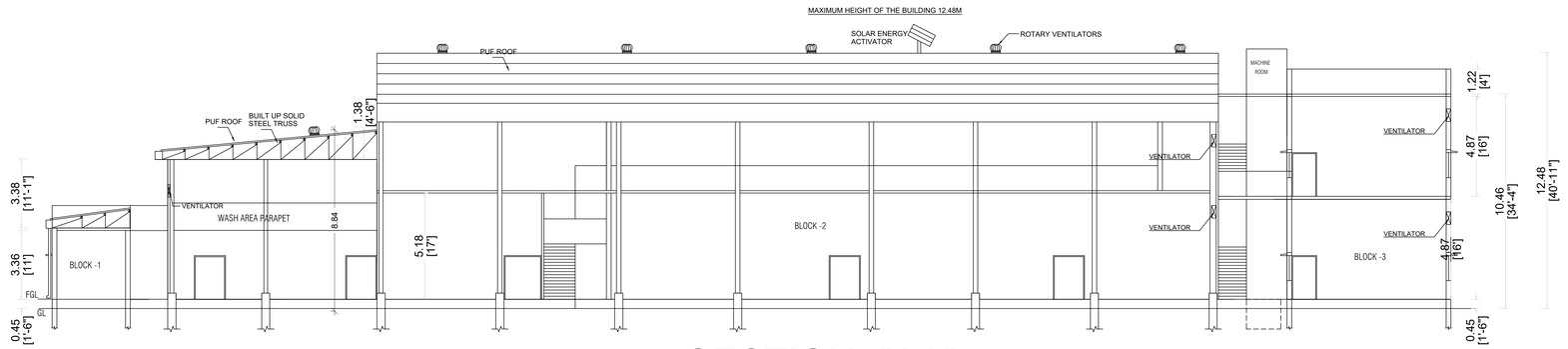

SECTION- "AA"

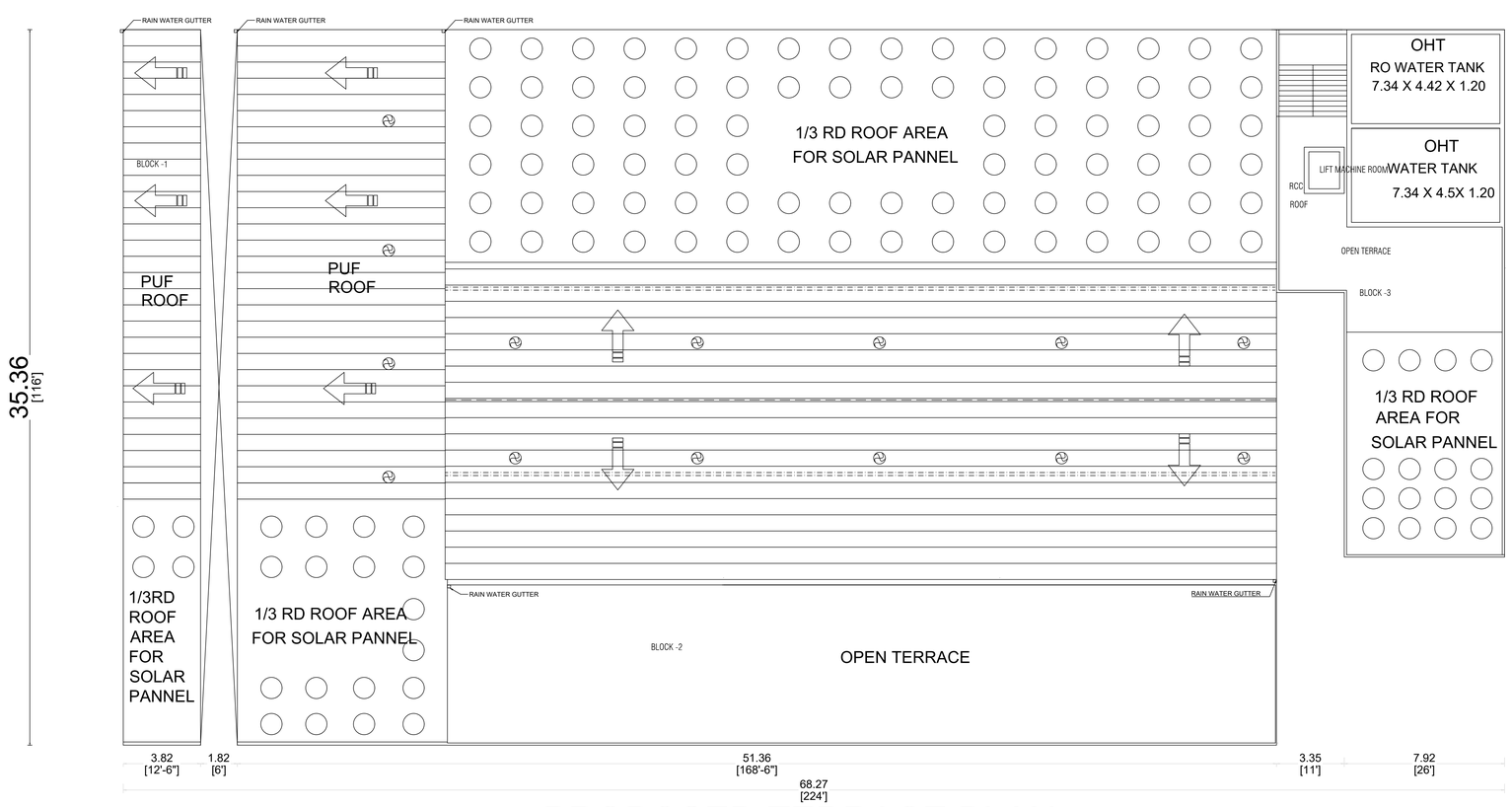

PROPOSED TERRACE PLAN

PLAN SHOWING THE PROPOSED CONSTRUCTION OF INDUSTRIAL BUILDING COMPRISED IN PLOT NO.241,242,243 & 244, IN SURVEY NO.124/29 PART, IN SIDCO INDUSTRIAL ESTATE (D.T.C.P. APPROVAL NO.136/2023), KODUR VILLAGE & PANCHAYAT, CHEYYUR TALUK CHENGALPATTU DISTRICT.

SHEET: 2 of 3

S E W N

APPLICANT NAME: M/s. GTEE SCINAGRO PROCESSING PRIVATE LIMITED

SCALE 1: 100

CATEGORY OF INDUSTRY: "ORANGE"
MANUFACTURING DETAILS:-
FOOD AND FOOD PROCESSING INCLUDING FRUITS AND VEGETABLE PROCESSING (AS PER G.O.(Ms.) NO.154 DATED 07.10.2025, ANNEXURE VII- S.NO.7)

DRAWING TITLE:
PROPOSED TERRACE FLOOR PLAN AND ELEVATION AND SECTION DRAWING

NOTE : ALL DIMENSIONS AREA IN METRE

AREA STATEMENT DETAILS

SITE AREA AS PER FMB : 3979.76 SQ.M
SITE AREA AS PER DOCUMENT : 3979.76 SQ.M
(Numbered as A to J)

PROPOSED BUILTUP AREA DETAILS :

S.NO	DESCRIPTION	FSI (SQ.M)	NON-FSI (SQ.M)	TOTAL (SQ.M)
1	BLOCK -1 (INDUSTRIAL)			
(i)	GROUND FLOOR	2266.81	-	2266.81
(ii)	FIRST FLOOR	1408.20	-	1408.20
2	TOTAL	3675.01	-	3675.01

TOTAL FSI AREA = 3675.01
FLOOR SPACE INDEX = 3675.01 / 3979.76 = 0.92

PARKING CALCULATION :

LORRY PARKING(Factory Area) - 3675.01 SQ.M/750 SQ.M = 4.90 Nos
CAR PARKING(OFFICE Area) - 11.42 SQ.M/150 SQ.M = 0.07 Nos
TWO WHEELER PARKING(Production Area)- 3675.01 SQ.M/75 SQ.M = 49.00 Nos
CYCLE PARKING(Production Area) - 3675.01 SQ.M/75 SQ.M = 49.00 Nos

DESCRIPTION	REQUIRED	PROVIDED
LORRY PARKING	5 NOS	5 NOS
EV CHARGING CAR PARKING	1 NOS	1 NOS
EV CHARGING TWO WHEELER	5 NOS	5 NOS
TWO WHEELER PARKING	49 NOS	55 NOS
PH-TWO WHEELER PARKING	5 NOS	5 NOS
CYCLE PARKING	49 NOS	50 NOS

COLOUR INDEX :

PROPOSED
BOUNDARY
ROAD
DRIVEWAY

REFERENCE :

SANITATION REQUIREMENTS

DESCRIPTION	REQUIRED		PROVIDED	
	MALE	FEMALE	MALE	FEMALE
WATER CLOSET With ABULTION TAP	1	2	2	2
PH WATER CLOSET	1	1	1	1
URINAL	1	-	2	-
DRINKING WATER FOUNTAIN	1	1	1	1
EMERGENCY SHOWER EYE WATER FOUNTAIN	1		1	

WORKER DETAILS :-

PROPOSED Nos OF WORKERS - 30, (Male - 10 Nos) & (Female-20 Nos)

JOINERY SCHEDULE

D1	0.90x2.13m	DOOR	RS 5	1.52x3.05m	ROLLING SHUTTER
D2	0.760x2.13m	DOOR	RS 11	3.35x5.0m	ROLLING SHUTTER
D4	1.22x2.13m	DOOR	W6	1.82x1.22m	WINDOW
D5	1.52x2.13m	DOOR	V1	0.91x0.91m	VENTILATOR
D6	1.83x2.13m	DOOR	INDUCED DRAUGHT ROTARY TURBO MECHANICAL VENTILATOR PROVIDED		

NOTE: ALL ROOMS MECHANICAL VENTILATION PROVIDED

MACHINERY DETAILS :

ITEM NO	NAME OF MACHINERY	QTY	H.P. DETAILS	TOTAL H.P
1	AUGER FILL MACHINE	1	2.68 HP	2.68 HP
2	TEA PACK MACHINE	1	4.02 HP	4.02 HP
3	PACKING MACHINE	1	15.01HP	15.01HP
4	GRINDING MACHINE	1	7.51 HP	7.51 HP
5	BLENDING MACHINE	1	4.02 HP	4.02 HP
6	DRYER MACHINE	1	20.11 HP	20.11 HP
7	FREEZE DRYER	1	20.11 HP	20.11 HP
8	SPRAY BRYER	1	26.81 HP	26.81 HP
9	EXTRACTION UNIT	1	24.13 HP	24.13 HP
	TOTAL			124.40 HP

SPECIFICATIONS:

FOUNDATION : Using R.C.C in M30(footing) upto 2.40m deep.
Super Structure : R.C.C Framed structure in M25 Concrete, Brick Work in C.M 1:5 Pre Engg. Building.
Roof : R.C.C in M25 Grade/ Galvalume Roof.
Flooring : Vacuum Dewatered/ Marble/ Granite/ Kota Flooring.
Finishes : Interior and exterior in emulsion paint over cement Plastering.
Weathering course : Using brick Jelly lime concrete and a layer of Weathering tiles.

For Glee Scinagro Processing Private Limited
Managing Director

APPLICANT SIGNATURE :-

BUILDING TECHNICAL APPROVAL:
ONLINE SWP APPLICATION NO: SWP/BPA/0782487/2026
SCRUNITY REFERENCE NO: IBYVOMV4
SITE BOUNDARY SHWN AS "A-J"

INDUSTRIAL TECHNICAL APPROVAL
SWP/INDUSTRIAL Building/ A.D./ D.T.C.P (CD3) NO.17/2026

Er. S. RAMESH, B.E.,
Registered Engineer Grade II (RE)
Reg. No : RE-II/TVLR/01/2020

REGISTERED ENGINEER SIGNATURE :-

A.RAJAN, ME.(STRUCTURE)
REGISTERED GRADE-1
DTCP STRUCTURAL ENGINEER
REG.No. CGLDIST/SE/G-1/2023/10/007
BSC CONSULTANTS
KODUNGAIYUR, CHENNAI-118.
MOB.: +91-88070 78990

STRUCTURAL ENGINEER SIGNATURE :-

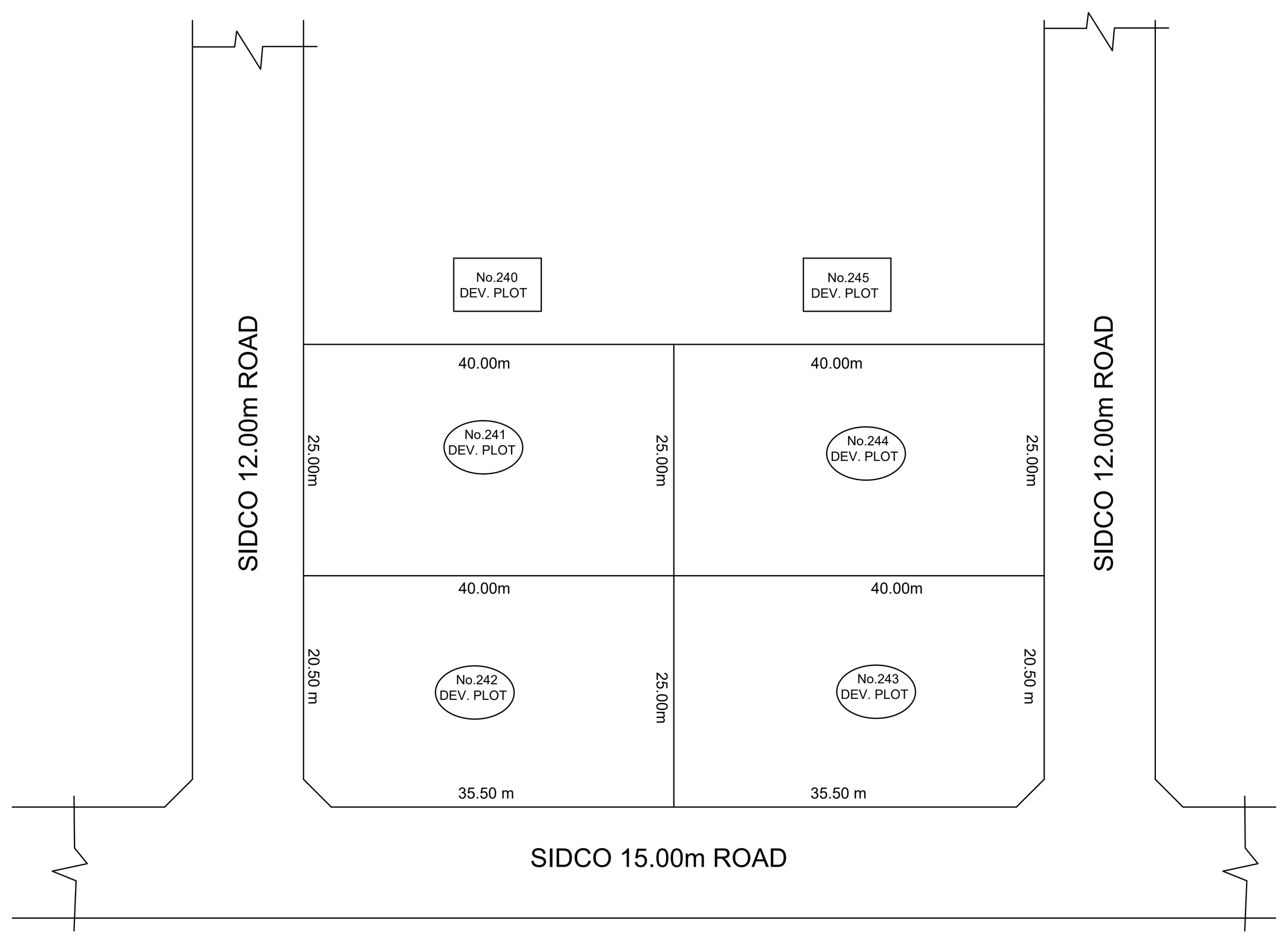

RESIDUARY PLOT DETAILS

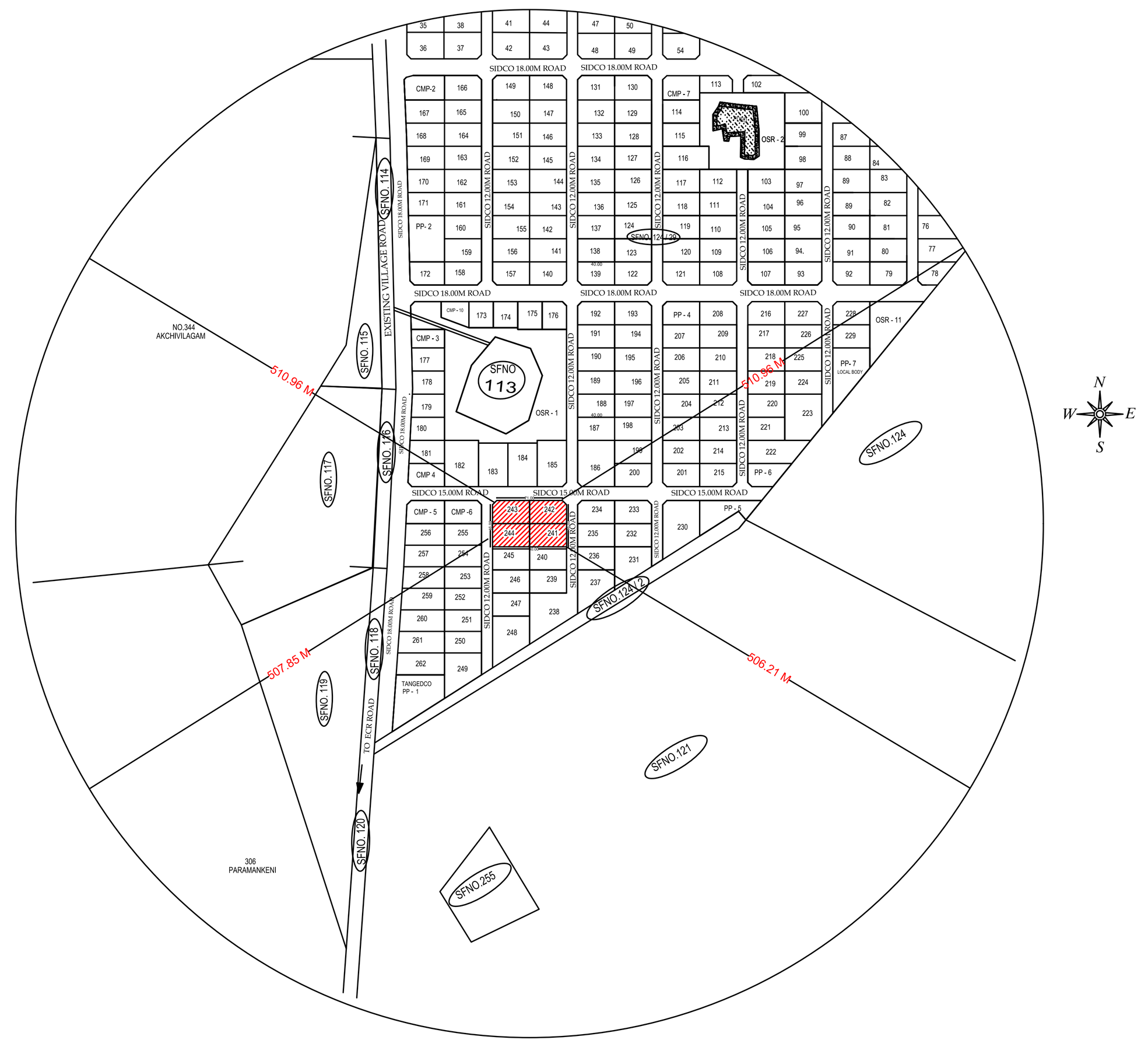

SCALE 1:2500

KEY PLAN

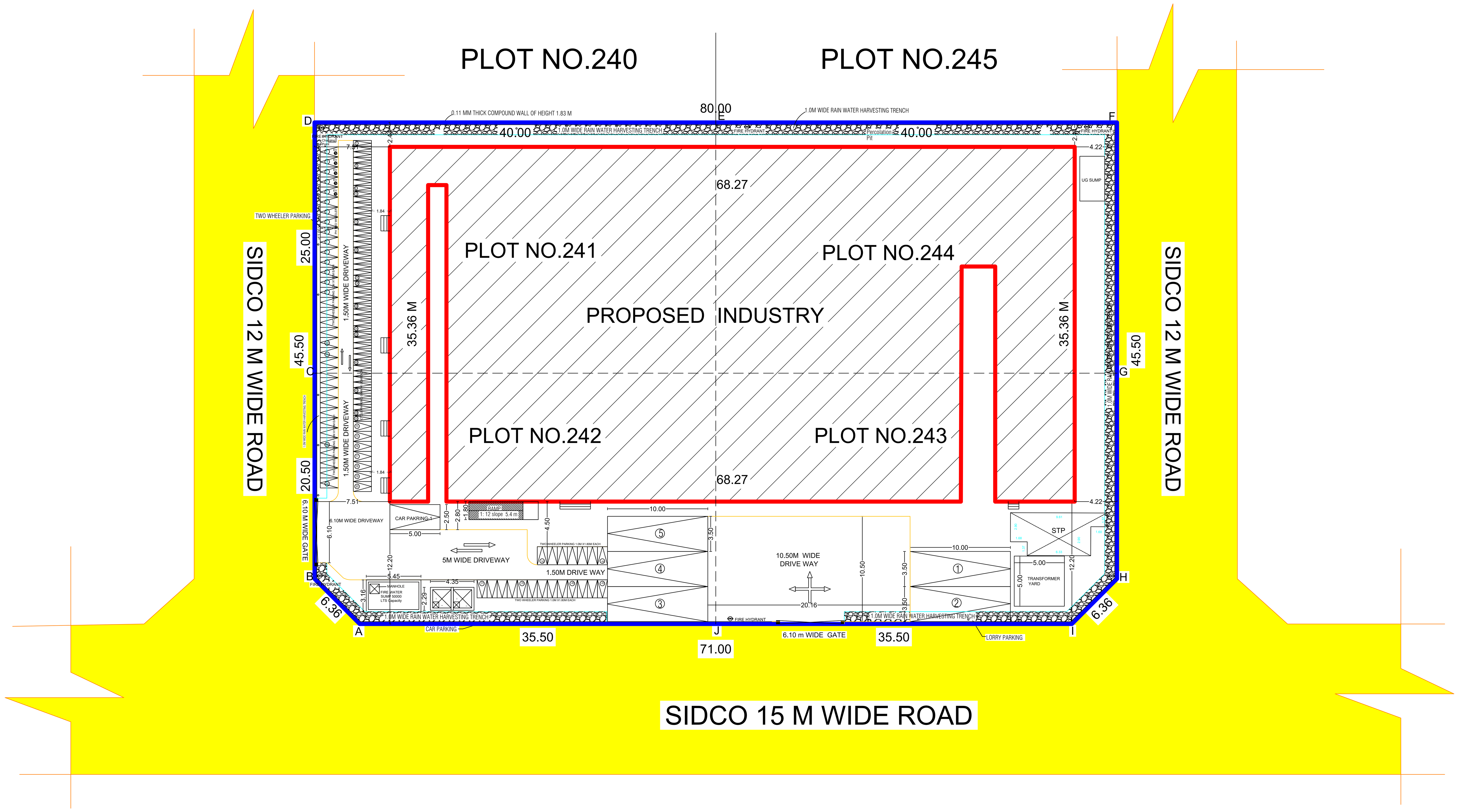

SITE PLAN

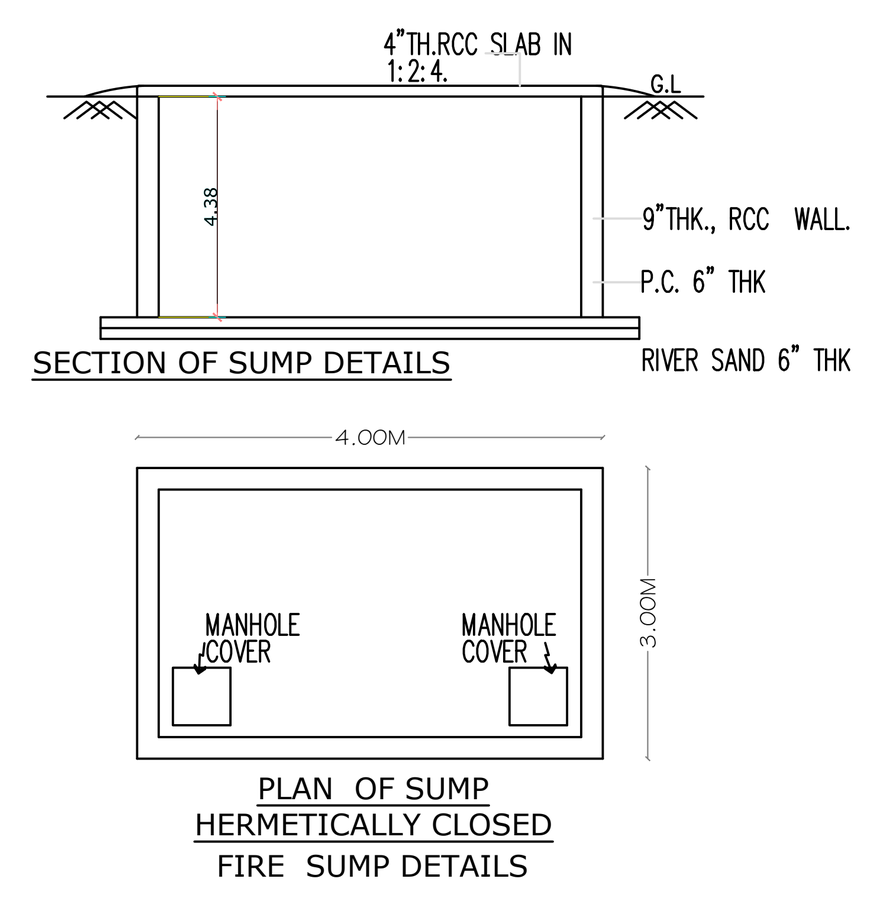

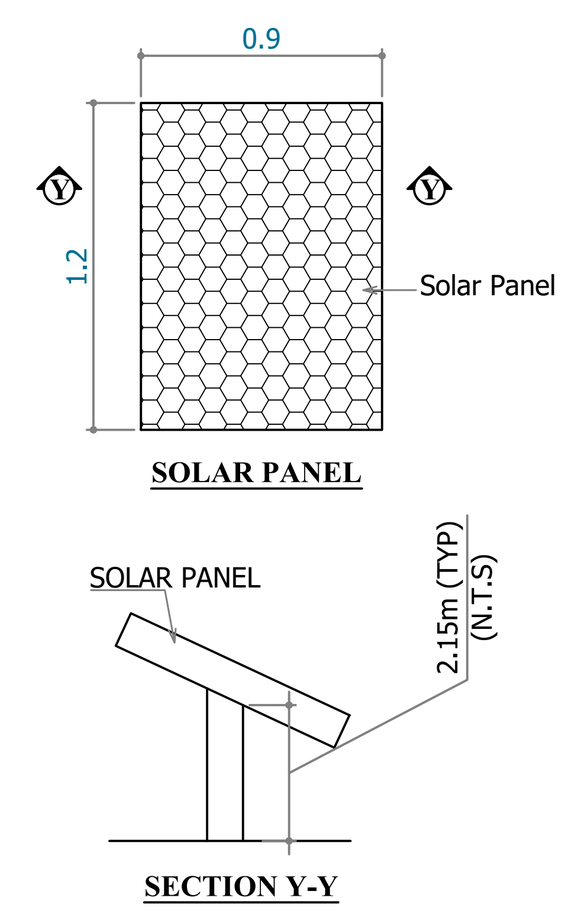

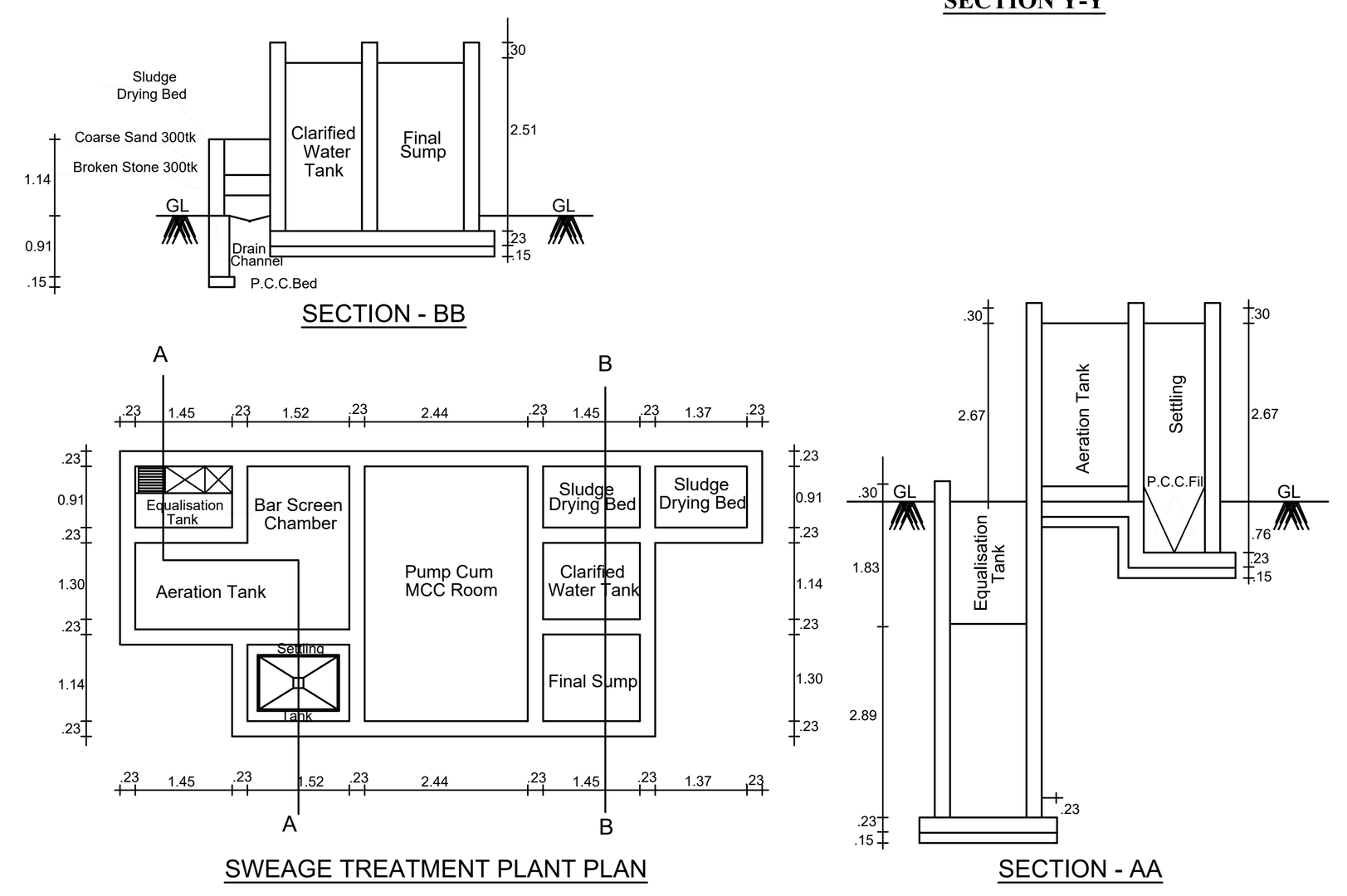

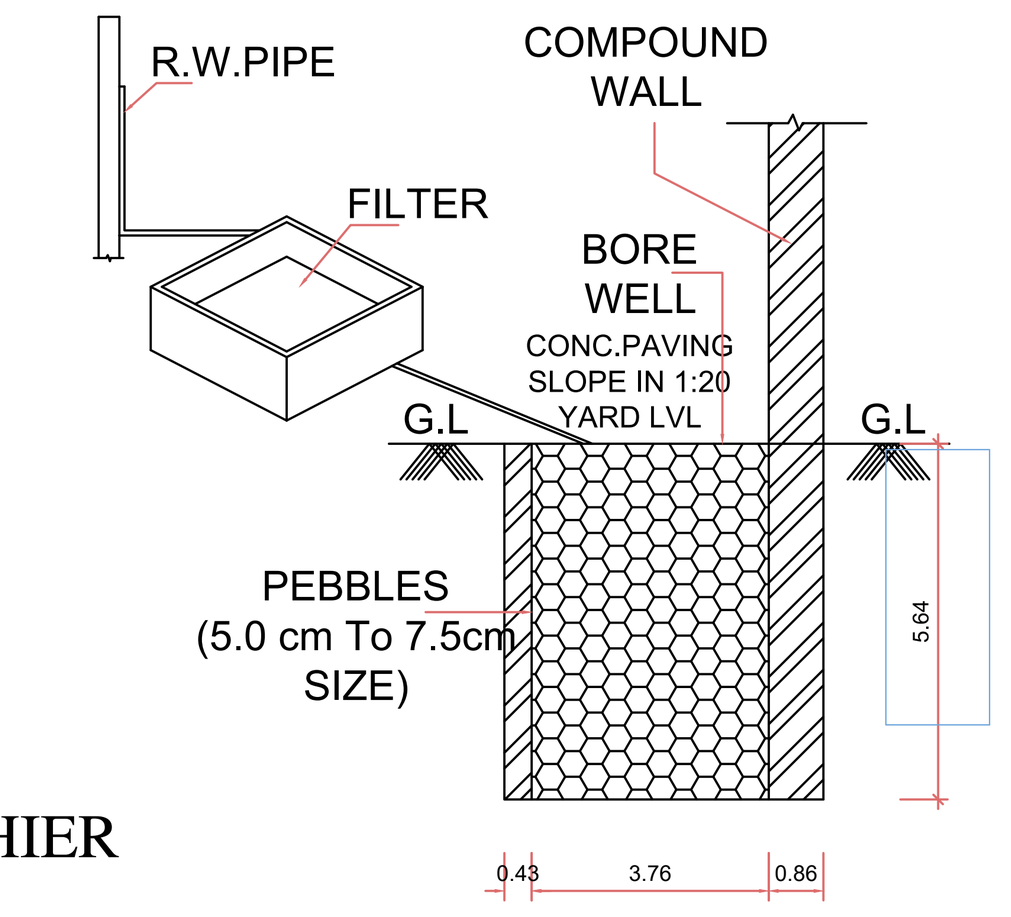

RAIN WATER TRENCH

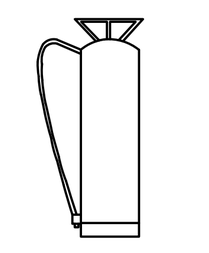

FIRE EXTINGUSHIER

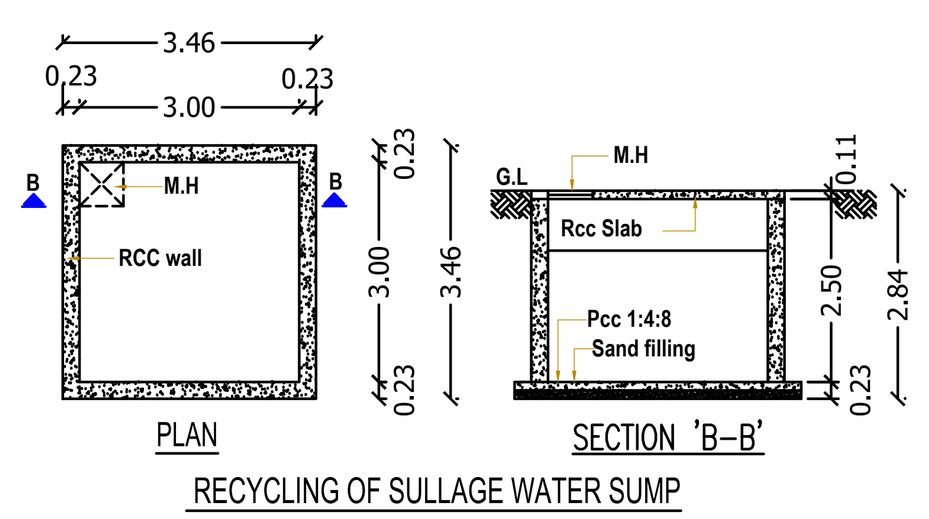

RECYCLING OF SULLAGE WATER SUMP

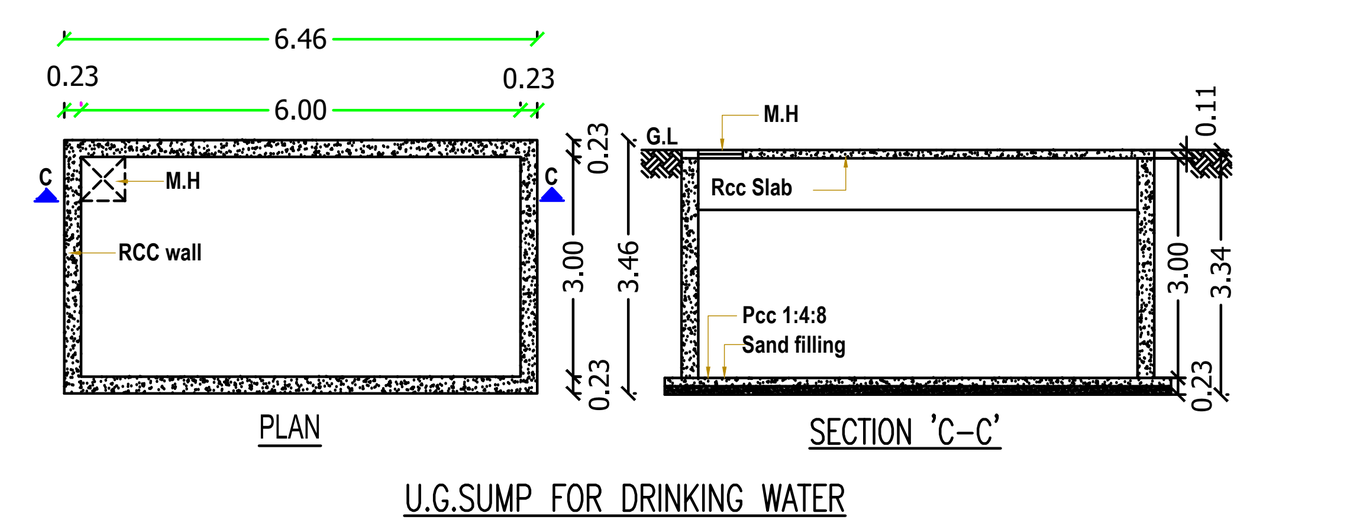

U.G.SUMP FOR DRINKING WATER

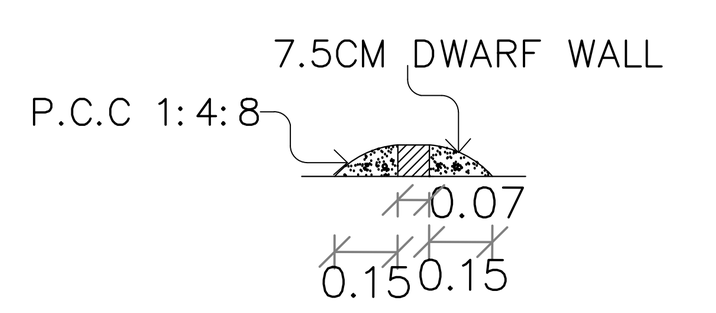

CROSS SECTION OF DWARF WALL

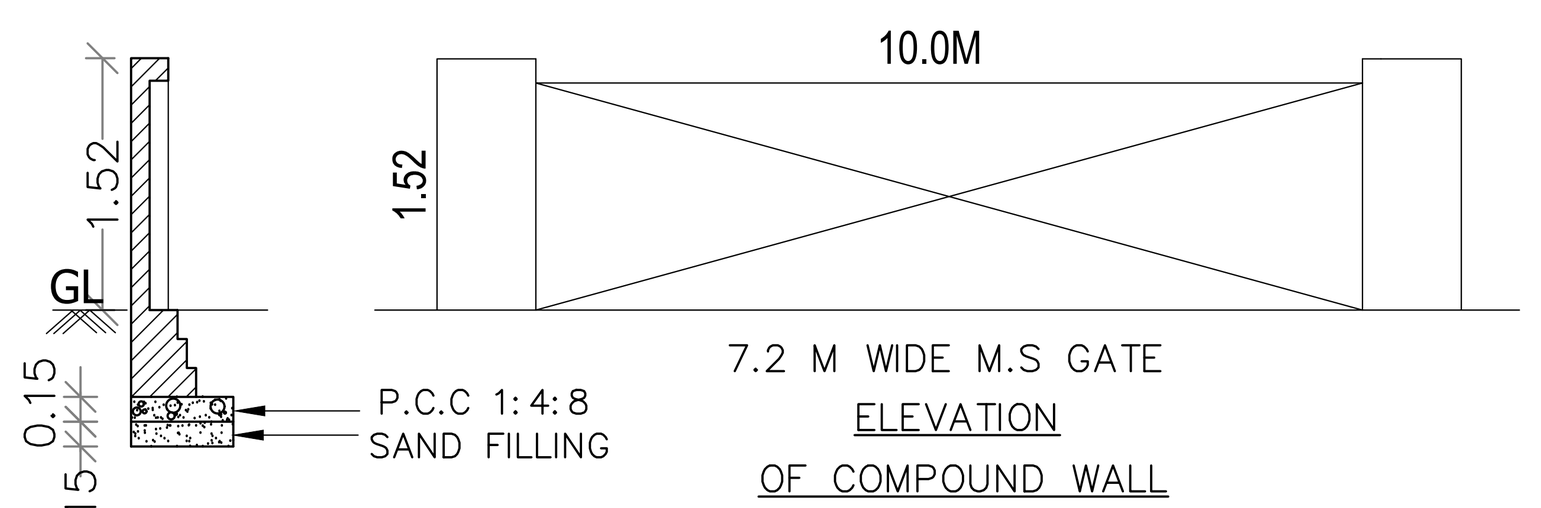

7.2 M WIDE M.S GATE
ELEVATION
OF COMPOUND WALL
SCALE 1:100

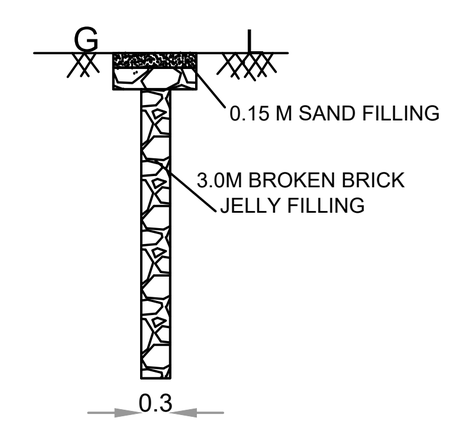

PERCULATION PIT

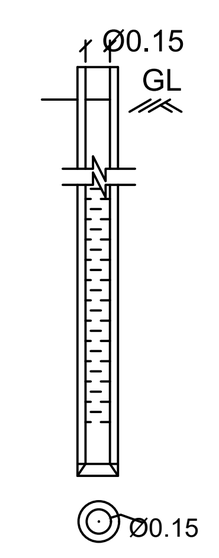

BORE WELL DETAILS

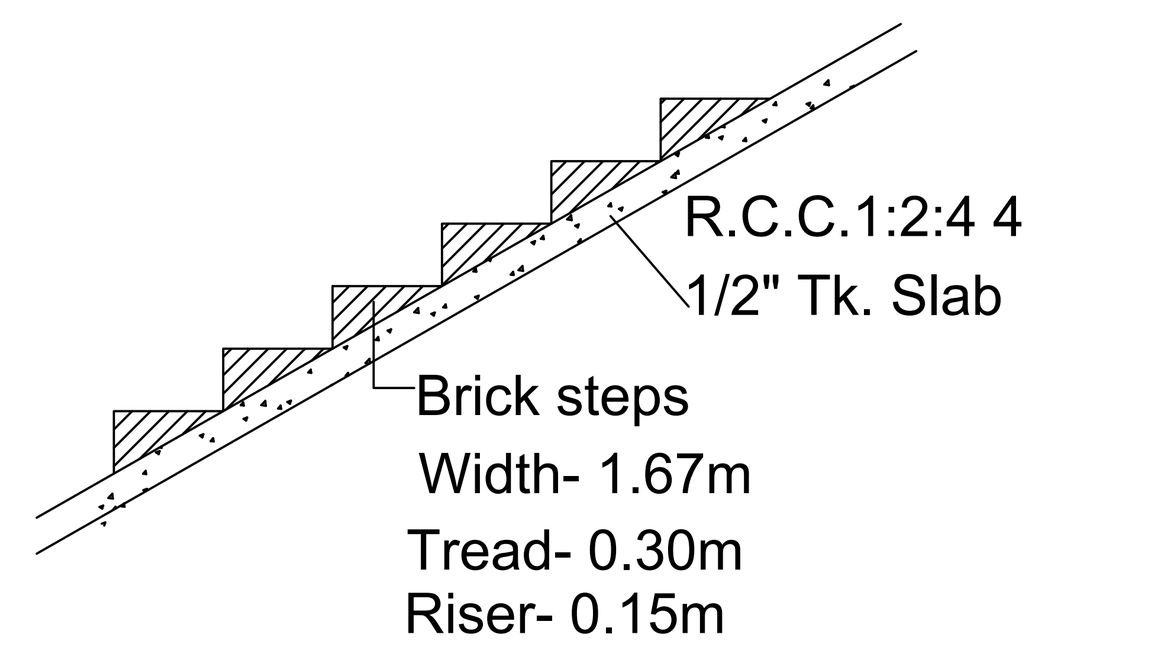

STAIRCASE DETAILS

BUILDING TECHNICAL APPROVAL:
ONLINE SWP APPLICATION NO: SWP/BPA/0782487/2026
SCRUNITY REFERENCE NO: IBYVOMV4
SITE BOUNDARY SHWN AS "A-J"

INDUSTRIAL TECHNICAL APPROVAL
SWP/INDUSTRIAL Building/ A.D./D.T.C.P (CD3) NO.17/2026

PLAN SHOWING THE PROPOSED CONSTRUCTION OF INDUSTRIAL BUILDING COMPRISED IN PLOT NO.241,242,243 & 244, IN SURVEY NO.124/29 PART, IN SIDCO INDUSTRIAL ESTATE (D.T.C.P. APPROVAL NO.136/2023), KODUR VILLAGE & PANCHAYAT, CHEYYUR TALUK CHENGALPATTU DISTRICT.

SHEET: 3 of 3

S E W N

APPLICANT NAME: M/s. GTEE SCINAGRO PROCESSING PRIVATE LIMITED

SCALE 1: 200

CATEGORY OF INDUSTRY: "ORANGE"
MANUFACTURING DETAILS:-
FOOD AND FOOD PROCESSING INCLUDING FRUITS AND VEGETABLE PROCESSING (AS PER G.O.(Ms.) NO.154 DATED 07.10.2025, ANNEXURE VII- S.NO.7)

DRAWING TITLE:
PROPOSED SITE PLAN DRAWING

NOTE : ALL DIMENSIONS AREA IN METRE

AREA STATEMENT DETAILS

SITE AREA AS PER FMB : 3979.76 SQ.M
SITE AREA AS PER DOCUMENT : 3979.76 SQ.M (Numbered as A to J)

PROPOSED BUILTUP AREA DETAILS :

S.NO	DESCRIPTION	FSI (SQ.M)	NON-FSI (SQ.M)	TOTAL (SQ.M)
1	BLOCK -1 (INDUSTRIAL) GROUND FLOOR	2266.81	-	2266.81
2	FIRST FLOOR	1408.20	-	1408.20
	TOTAL	3675.01	-	3675.01

TOTAL FSI AREA = 3675.01

FLOOR SPACE INDEX = 3675.01 / 3979.76 = 0.92

PARKING CALCULATION :

LORRY PARKING(Factory Area) - 3675.01 SQ.M/750 SQ.M = 4.90 Nos
CAR PARKING(OFFICE Area) - 11.42 SQ.M/150 SQ.M = 0.07 Nos
TWO WHEELER PARKING(Production Area)- 3675.01 SQ.M/75 SQ.M = 49.00 Nos
CYCLE PARKING(Production Area) - 3675.01 SQ.M/75 SQ.M = 49.00 Nos

DESCRIPTION	REQUIRED	PROVIDED
LORRY PARKING	5 NOS	5 NOS
EV CHARGING CAR PARKING	1 NOS	1 NOS
EV CHARGING TWO WHEELER	5 NOS	5 NOS
TWO WHEELER PARKING	49 NOS	55 NOS
PH-TWO WHEELER PARKING	5 NOS	5 NOS
CYCLE PARKING	49 NOS	50 NOS

COLOUR INDEX :

PROPOSED
BOUNDARY
ROAD
DRIVEWAY

REFERENCE :

SANITATION REQUIREMENTS

DESCRIPTION	REQUIRED MALE	REQUIRED FEMALE	PROVIDED MALE	PROVIDED FEMALE
WATER CLOSET With ABULTION TAP	1	2	2	2
PH WATER CLOSET	1	1	1	1
URINAL	1	-	2	-
DRINKING WATER FOUNTAIN	1	1	1	1
EMERGENCY SHOWER EYE WATER FOUNTAIN	1		1	

WORKER DETAILS :-

PROPOSED Nos OF WORKERS - 30, (Male - 10 Nos) & (Female-20 Nos)

JOINERY SCHEDULE

D1	0.90x2.13m	DOOR	RS 5	1.52x3.05m	ROLLING SHUTTER
D2	0.760x2.13m	DOOR	RS 11	3.35x5.0m	ROLLING SHUTTER
D4	1.22x2.13m	DOOR	W6	1.82x1.22m	WINDOW
D5	1.52x2.13m	DOOR	V1	0.91x0.91m	VENTILATOR
D6	1.83x2.13m	DOOR	INDUCED DRAUGHT ROTARY TURBO MECHANICAL VENTILATOR PROVIDED		

NOTE: ALL ROOMS MECHANICAL VENTILATION PROVIDED

MACHINERY DETAILS :

ITEM NO	NAME OF MACHINERY	QTY	H.P. DETAILS	TOTAL H.P
1	AUGER FILL MACHINE	1	2.68 HP	2.68 HP
2	TEA PACK MACHINE	1	4.02 HP	4.02 HP
3	PACKING MACHINE	1	15.01HP	15.01HP
4	GRINDING MACHINE	1	7.51 HP	7.51 HP
5	BLENDING MACHINE	1	4.02 HP	4.02 HP
6	DRYER MACHINE	1	20.11 HP	20.11 HP
7	FREEZE DRYER	1	20.11 HP	20.11 HP
8	SPRAY BRYER	1	26.81 HP	26.81 HP
9	EXTRACTION UNIT	1	24.13 HP	24.13 HP
	TOTAL			124.40 HP

SPECIFICATIONS:

FOUNDATION : Using R.C.C in M30(footing) upto 2.40m deep.
Super Structure : R.C.C Framed structure in M25 Concrete, Brick Work in C.M 1:5 Pre Engg. Building.
Roof : R.C.C in M25 Grade/ Galvalume Roof.
Flooring : Vacuum Dewatered/ Marble/ Granite/ Kota Flooring.
Finishes : Interior and exterior in emulsion paint over cement Plastering.
Weathering course : Using brick Jelly lime concrete and a layer of Weathering tiles.

For Gtee Scinagro Processing Private Limited
Managing Director

APPLICANT SIGNATURE :-

Er. S. RAMESH, B.E.,
Registered Engineer Grade II (RE)
Reg. No : RE-II/TVLR/01/2020

A.RAJAN, ME.,(STRUCTURE)
REGISTERED GRADE-1
DTCP STRUCTURAL ENGINEER
REG.No. CGLDIST/SE/Gr-1/2023/10/007
BSC CONSULTANTS
KODUNGAIYUR, CHENNAI-118.
MOB.: +91-88070 78990

REGISTERED ENGINEER SIGNATURE :-

STRUCTURAL ENGINEER SIGNATURE :-

THE LANDLENS SUITE

Eight ways to know a piece of land before you pay for it.

This report covers one part of the picture. These cover the rest, drawn from the same government records, for any property in Tamil Nadu.

LandLens One
Ask anything about a property and get an answer grounded in live government records, with the sources shown.
/landlens/one

Verify My Land
Every record check run on one property and returned as a single report.
/landlens/verify-my-land

Legal Opinion
An advocate's written opinion on the title, built on the records we pull for it.
/landlens

One Map
Every layer on one map: the parcel, its boundary, zoning, water bodies and what sits around it.
/landlens/one/map

PriceMap
What land actually changed hands for around this plot, taken from the registered deeds.
/landlens/pricemap

Build Scope
What you are allowed to build here: floor space, height, coverage and setbacks.
/landlens/build-scope

Property Tracker
Watch a property and hear about it when something new is registered against it.
/landlens/property-tracker

Deal Room
Run the transaction in one place: documents, stamping, signatures and the parties.
/landlens/deal-room

FREE TOOLS · NO ACCOUNT NEEDED

Twenty-four checks you can run yourself, at no cost.

Records and verification

The registers themselves, read for you.

- Encumbrance Certificate
- Patta and Chitta
- Field Measurement Sketch
- EC Analyzer
- Bank charge check
- Court case search
- Seller background check
- Approval check by survey

Value and duty

What it is worth and what it costs to register.

- Guideline value by street
- Guideline value by survey
- Stamp duty and registration fees
- Capital gains
- Floor space index
- Area unit converter

Zoning and land use

What the plan says can happen on this land.

- Land use zone finder
- CMDA land use check
- Coastal regulation zone
- Master plan check
- Water bodies finder
- Airport height clearance

Registers and directories

Who holds it, and which office keeps the record.

- Find your registering office
- Temple property check
- Waqf property check
- RERA register

Every free tool
/tools

Services we run for you
/services

The LandLens suite
/landlens/one

Verified RealEstate™

Every claim in this document traces back to a government record.

- Legal opinions, due diligence and title verification
- Building plan, layout and sub-division approvals
- Completion and occupancy certificates, regularisation
- Escrow, negotiation and NRI property management
- Land survey, soil testing, architecture and construction

Verified RealEstate
3/350/2 Mettukuppam,
OMR Thoraipakkam,
Chennai 600 097, India
hello@verified.realestate
+91 9996 12 9996

Prepared from the registers named on the page each finding sits on. Where a register could not be read, this document says so in its place rather than leaving the gap to be read as a clean result.