Verified RealEstate™

REFERENCE
17/2026-2027

ISSUED
13 June 2026

PP APPROVAL RECORD

Planning Permission

Survey 85

Urapakkam

Chengalpattu district, Tamil Nadu

APPROVAL TYPE
Building Plan

ISSUING AUTHORITY
Rural Panchayat

The approval as the planning authority issued it, reproduced in full behind this page.

An approval speaks to what was sanctioned, not to what was built. Completion is a separate record.

Verified RealEstate™

3/350/2 Mettukuppam,
OMR Thoraipakkam,
Chennai 600 097, India

hello@verified.realestate

+91 9996 12 9996

verified.realestate

DIGITALLY VERIFIED RECORD

PLAN SHOWING THE PROPOSED STILT FLOOR , FIRST FLOOR, SECOND FLOOR AND THIRD FLOOR (6 DWELLING UNIT) CONSTRUCTION OF RESIDENTIAL BUILDING AT PLOT NO.44B," SRI BABA NAGAR PHASE - II",IN OLD S.NO.85, AS PER PATTA NO:8454, NEW S.NO:85/10, OF AYYANCHERI VILLAGE, URAPAKKAM PANCHAYAT, KATTANKOLATHUR PANCHAYAT UNION, VANDALUR TALUK, CHENGALPET DISTRICT.

LAND OWNER NAME: MOHAMED NIYAZ

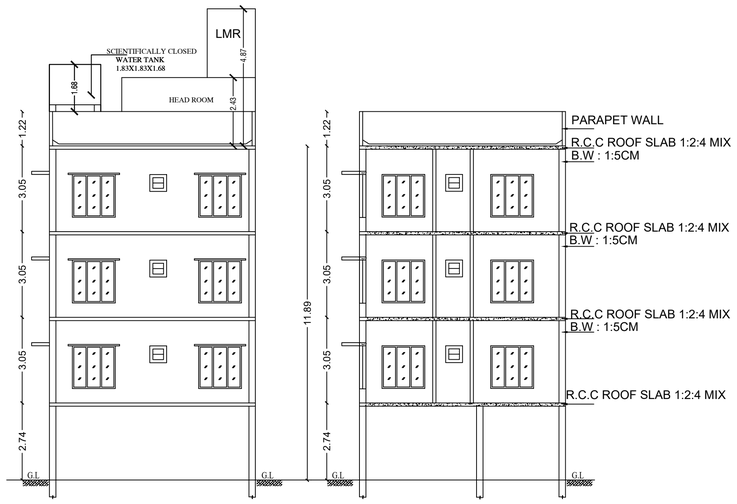

FRONT ELEVATION SECTION ON "SS"

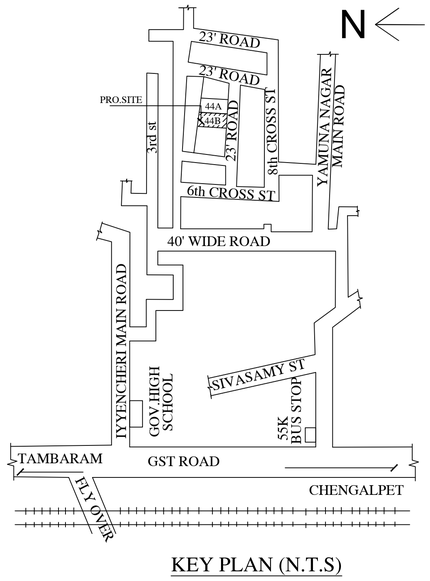

KEY PLAN (N.T.S)

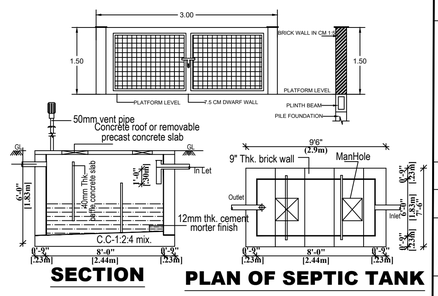

SECTION PLAN OF SEPTIC TANK

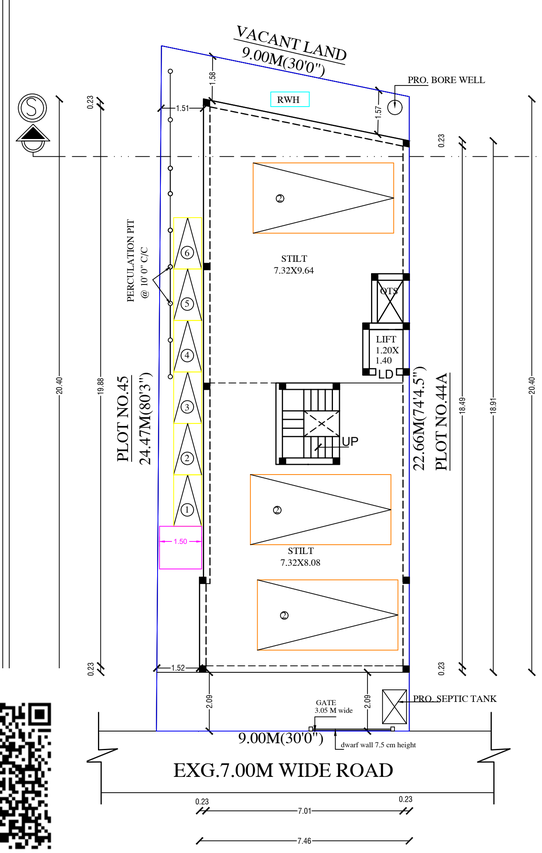

PRO.SITE CUM STILT FLOOR PLAN

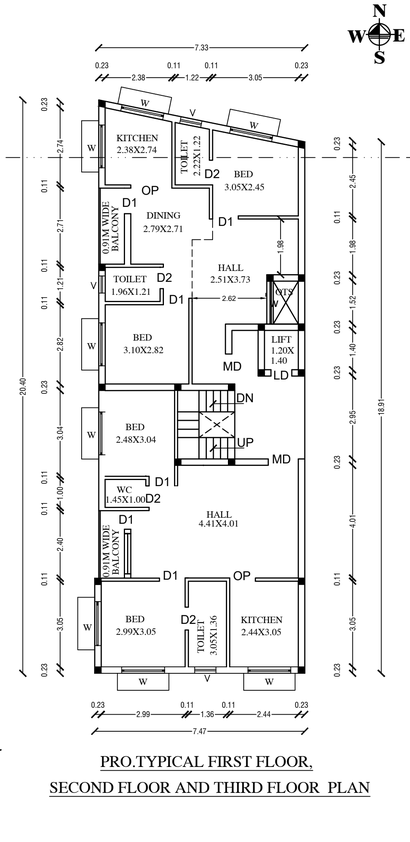

PRO.TYPICAL FIRST FLOOR, SECOND FLOOR AND THIRD FLOOR PLAN

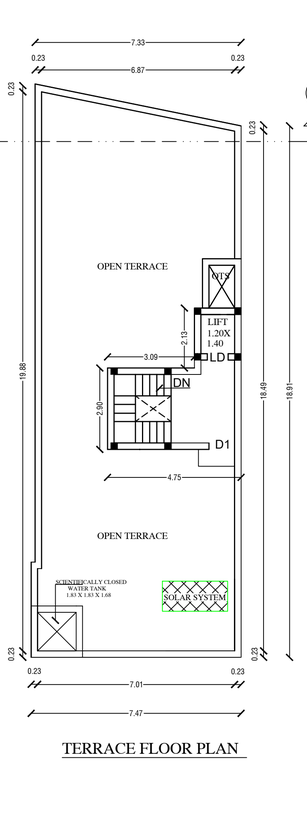

TERRACE FLOOR PLAN

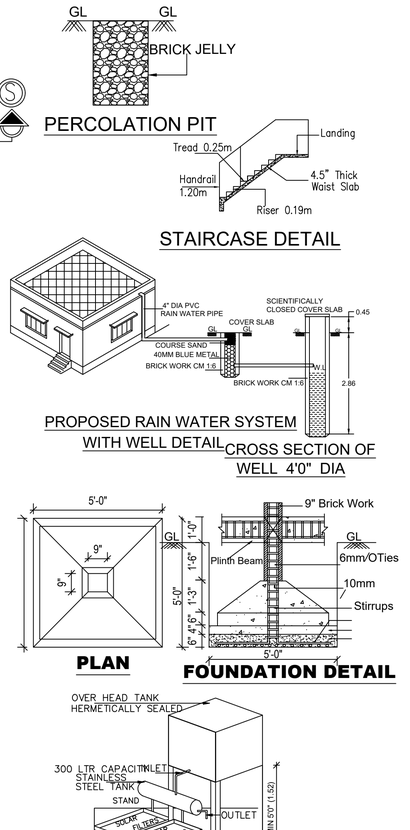

PERCOLATION PIT

STAIRCASE DETAIL

PROPOSED RAIN WATER SYSTEM WITH WELL DETAIL CROSS SECTION OF WELL 4'0" DIA

PLAN FOUNDATION DETAIL

SOLAR WATER HEATING SYSTEM

REFERENCE:
LAYOUT WAS APPROVED BY DTCP VIDE
LP/DTCP/NO.185/99
SUB DIVISION WAS APPROVED
NA .KA.NO.1149/2026/A5 DATED:20.05.2026

SCALE 1"=8'-0" (1:100)

AREA STATEMENT

PLOT	SQ.FT	SQ.M
PLOT AREA (AS PER SUB DIVISION)	2319.00	215.44
F.S.I AREA		
PRO. F.F. AREA	1529.13	142.06
PRO. S.F. AREA	1529.13	142.06
PRO. T.F. AREA	1529.13	142.06
TOTAL AREA	4587.39	426.18
NON-F.S.I AREA		
PRO. STILT FLOOR AREA	1529.13	142.06
HEAD ROOM AREA	158.66	14.74
F.S.I	1.97	
PLOT COVERAGE	65.95%	

COLOUR INDEX

PROPOSED	
BOUNDARY	
ROAD	
EXISTING	

JOINERY DETAILED

DOOR	MD	3'3"x7'0"	99x213
DOOR	D1	3'0"x7'0"	91x213
DOOR	D2	2'6"x7'0"	76x213
WINDOW	W	5'0"x5'0"	152x152
KIT. WINDOW	KW	5'0"x5'0"	152x152
VENTILATOR	V	2'0"x2'0"	61x61

OWNER SIGNATURE

SS DESIGNS
G. SANGEETHA, D.C.E.,
REGISTERED ENGINEER GRADE - III RE
NANDHIVARAM GUDUVANCHERI MUNICIPALITY
Regn. No: 178 / LS / 2023 / 00007
G.C.C Regn. No: RE3007020019
DTCP Regn No: CGLRGN / RE / Gr - III / 2019 / 08 / 017
Shop No. 1, Rohini Nagar, Railway Station Road, West Urapakkam, 603 211. Cell: 97909 31924

REGISTERED ENGINEER



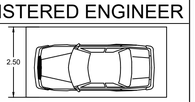

THE LANDLENS SUITE

Eight ways to know a piece of land before you pay for it.

This report covers one part of the picture. These cover the rest, drawn from the same government records, for any property in Tamil Nadu.

LandLens One
Ask anything about a property and get an answer grounded in live government records, with the sources shown.
/landlens/one

Verify My Land
Every record check run on one property and returned as a single report.
/landlens/verify-my-land

Legal Opinion
An advocate's written opinion on the title, built on the records we pull for it.
/landlens

One Map
Every layer on one map: the parcel, its boundary, zoning, water bodies and what sits around it.
/landlens/one/map

PriceMap
What land actually changed hands for around this plot, taken from the registered deeds.
/landlens/pricemap

Build Scope
What you are allowed to build here: floor space, height, coverage and setbacks.
/landlens/build-scope

Property Tracker
Watch a property and hear about it when something new is registered against it.
/landlens/property-tracker

Deal Room
Run the transaction in one place: documents, stamping, signatures and the parties.
/landlens/deal-room

FREE TOOLS · NO ACCOUNT NEEDED

Twenty-four checks you can run yourself, at no cost.

Records and verification

The registers themselves, read for you.

- Encumbrance Certificate
- Patta and Chitta
- Field Measurement Sketch
- EC Analyzer
- Bank charge check
- Court case search
- Seller background check
- Approval check by survey

Value and duty

What it is worth and what it costs to register.

- Guideline value by street
- Guideline value by survey
- Stamp duty and registration fees
- Capital gains
- Floor space index
- Area unit converter

Zoning and land use

What the plan says can happen on this land.

- Land use zone finder
- CMDA land use check
- Coastal regulation zone
- Master plan check
- Water bodies finder
- Airport height clearance

Registers and directories

Who holds it, and which office keeps the record.

- Find your registering office
- Temple property check
- Waqf property check
- RERA register

Every free tool
/tools

Services we run for you
/services

The LandLens suite
/landlens/one

Verified RealEstate™

Every claim in this document traces back to a government record.

- Legal opinions, due diligence and title verification
- Building plan, layout and sub-division approvals
- Completion and occupancy certificates, regularisation
- Escrow, negotiation and NRI property management
- Land survey, soil testing, architecture and construction

Verified RealEstate
3/350/2 Mettukuppam,
OMR Thoraipakkam,
Chennai 600 097, India
hello@verified.realestate
+91 9996 12 9996

Prepared from the registers named on the page each finding sits on. Where a register could not be read, this document says so in its place rather than leaving the gap to be read as a clean result.