PP APPROVAL RECORD

Planning Permission

Pudukkottai

Coimbatore district, Tamil Nadu

APPROVAL TYPE
Building Plan

ISSUING AUTHORITY
DTCP

The approval as the planning authority issued it, reproduced in full behind this page.

An approval speaks to what was sanctioned, not to what was built. Completion is a separate record.

Verified RealEstate™
3/350/2 Mettukuppam,
OMR Thoraipakkam,
Chennai 600 097, India

hello@verified.realestate
+91 9996 12 9996
verified.realestate

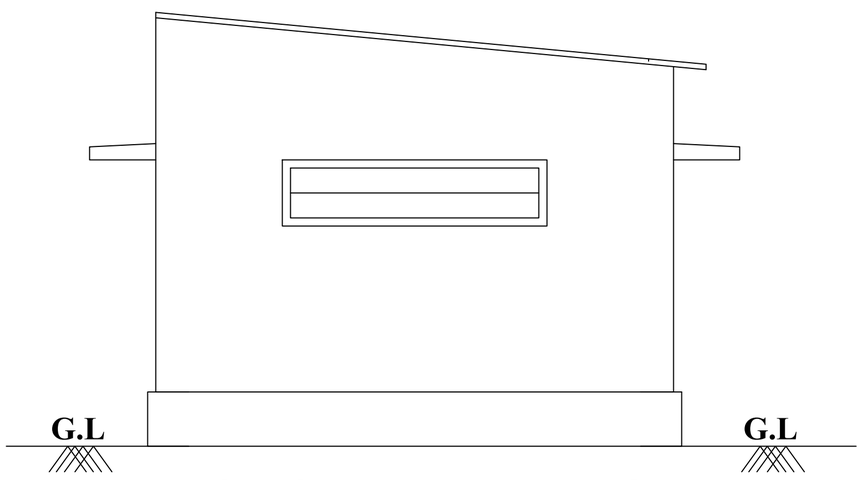

WEST SIDE ELEVATION

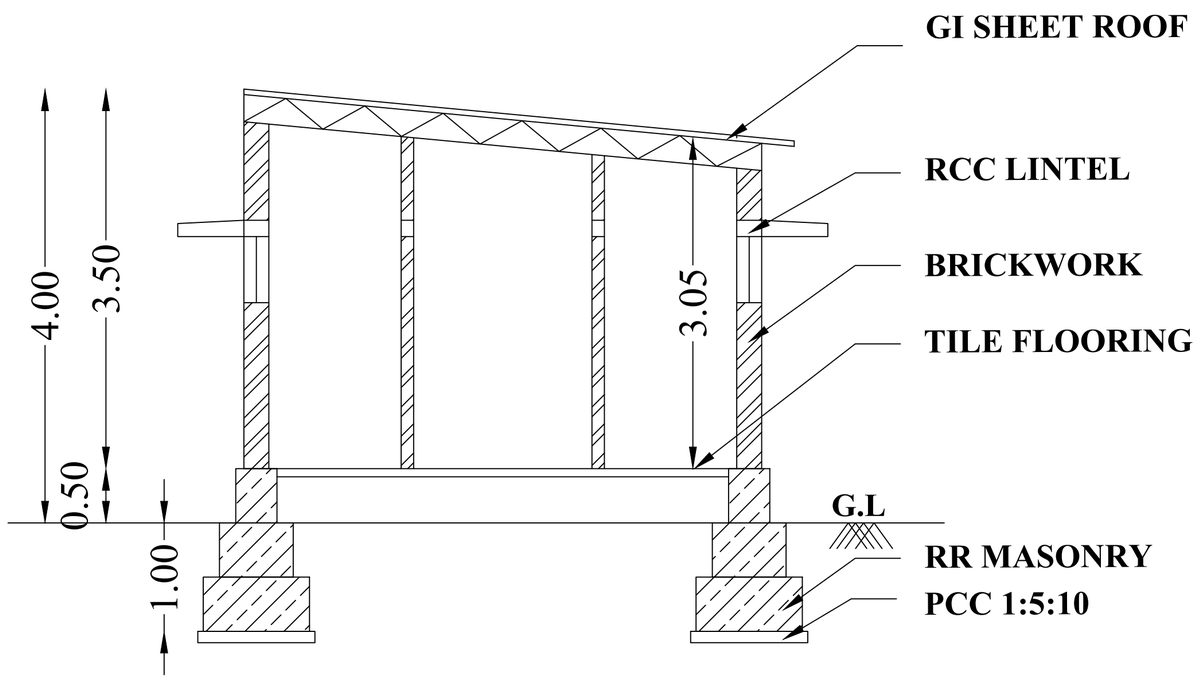

CROSS SECTION ON 'AA'

GROUND FLOOR PLAN

N
W E
S

TTK PRESTIGE LIMITED

GROUND FLOOR PLAN SHOWING THE PROPOSED TOILET BLOCK IN S.F.NO.448/1 OF ARISIPALAYAM VILLAGE, MADUKKARAI TALUK, COIMBATORE DISTRICT.

SCALE = 1:100

AREA DETAILS	AREA IN SQ.M	AREA IN SQ.FT
AREA OF THE GROUND FLOOR	68	732

JOINERY DETAILS

Sym.	DESCRIPTION	IN METRE
D	DOOR	1.00 X 2.13
D1	DOOR	0.76 X 2.13
V	VENTILATOR	2.44 X 0.61
V1	VENTILATOR	1.00 X 0.61

NOTE :

ALL DIMENSIONS ARE IN METRE UNLESS OTHERWISE STATED

- FIRE FIGHTING EXTINGUISHER

Er. R. LOGANATH
Chartered Eng
Coimbatore LPA
No.38, 1st Stree
Edayarpalayam (Pos

STRUCTURAL ENGINEER

Er. S. JANARTHANAN, ME., FIV
Registered Engineer Grade-I (RE)
Coimbatore LPA/RE/GR-I/19/03/007
22/47, Mariamman Koil Street, Sowripalayam,
Coimbatore-641 028.

ENGINEER / L.B.S

For TTK PRESTIGE LTD.

R. Azhagesen
General Manager – Operations

APPLICANT

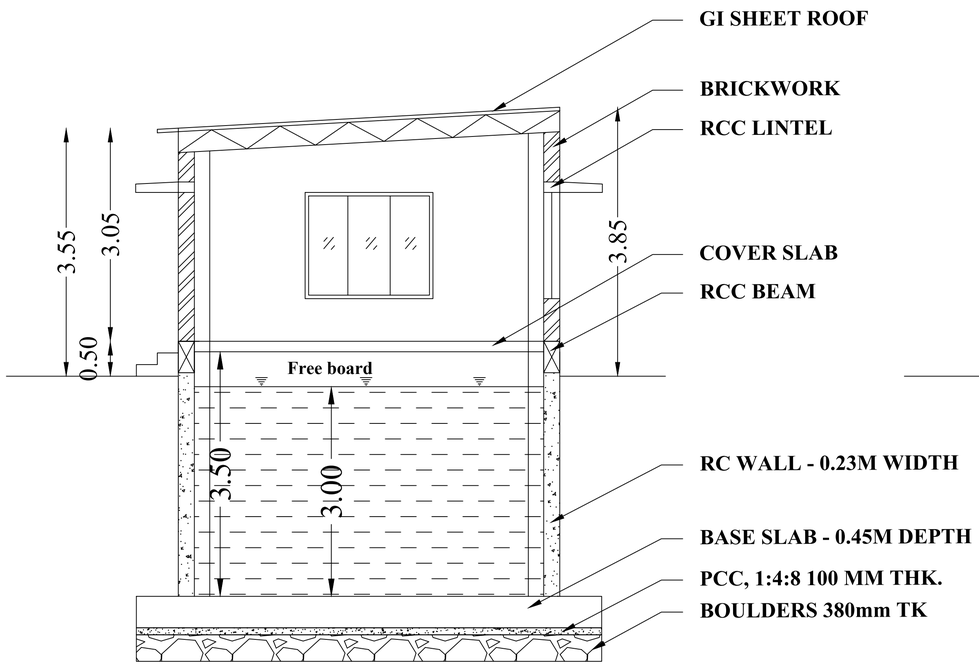

CROSS SECTION ON 'AA'

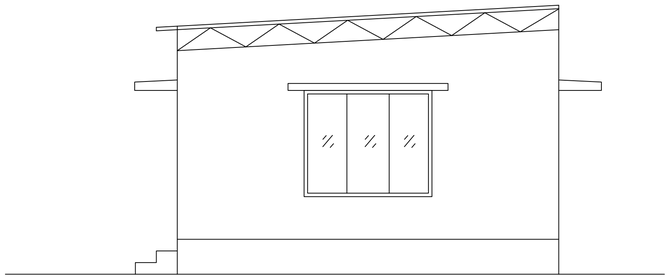

SOUTH SIDE ELEVATION

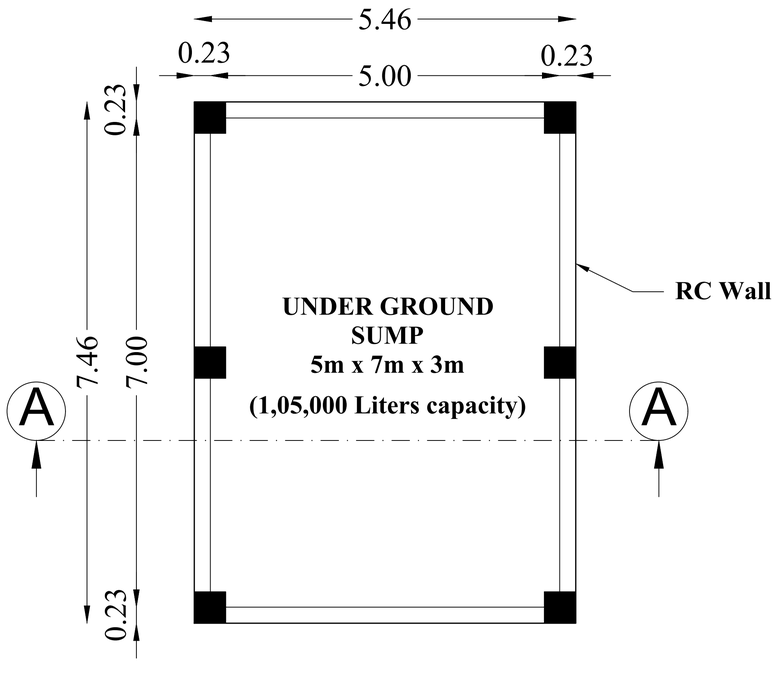

SUMP PLAN

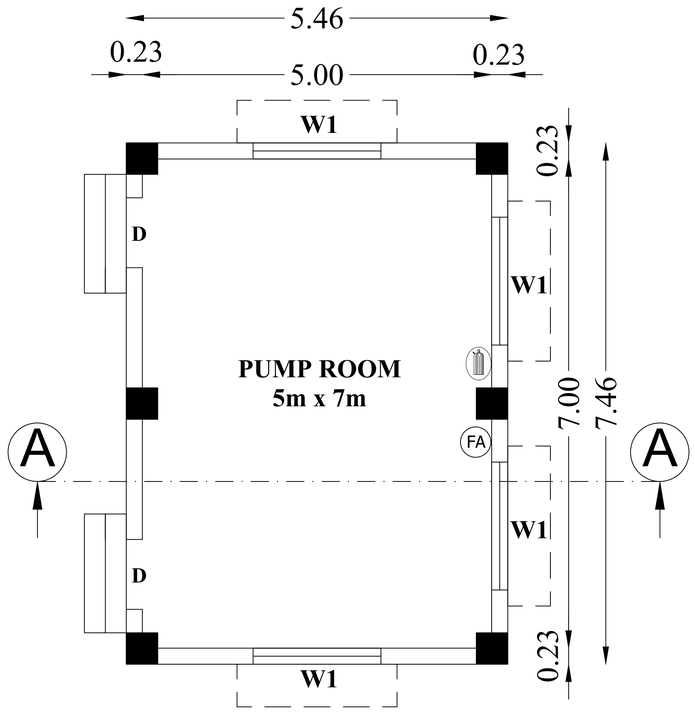

GROUND FLOOR PLAN

TTK PRESTIGE LIMITED

PLAN SHOWING THE PROPOSED SUMP CUM PUMP ROOM IN S.F.NO.448/1 OF ARISIPALAYAM VILLAGE, MADUKKARAI TALUK, COIMBATORE DISTRICT.

SCALE = 1:100

AREA DETAILS	AREA IN SQ.M	AREA IN SQ.FT
AREA OF THE PUMP ROOM	41	441

JOINERY DETAILS

Sym.	DESCRIPTION	IN METRE
D	DOOR	1.00 X 2.13
W1	WINDOW	1.83 X 1.52

NOTE :

ALL DIMENSIONS ARE IN METRE UNLESS OTHERWISE STATED

CAPACITY OF SUMP (5 X 7 X 3M) = 1,05,000 LITERS

(FA) - FIRE FIGHTING EXTINGUISHER

(FA) - FIRE ALARM

Er. R. LOGANATHAN M.E., (STRUCT.) M.I.E.,
Chartered Engineer (M 166362-1)
Coimbatore LPA/SE/GR-I/19/04/033
No.38, 1st Street, Sivaji Colony Extn.
Edayarpalayam (Post), Coimbatore - 641 025

STRUCTURAL ENGINEER

Er. S. JANARTHANAN, ME., FIV
Registered Engineer Grade-I (RE)
Coimbatore LPA/RE/GR-I/19/03/007
22/47, Mariamman Koil Street, Sowripalayam,
Coimbatore-641 028.

ENGINEER / L.B.S

For TTK PRESTIGE LTD.

R. Azhagesen
General Manager – Operations

APPLICANT

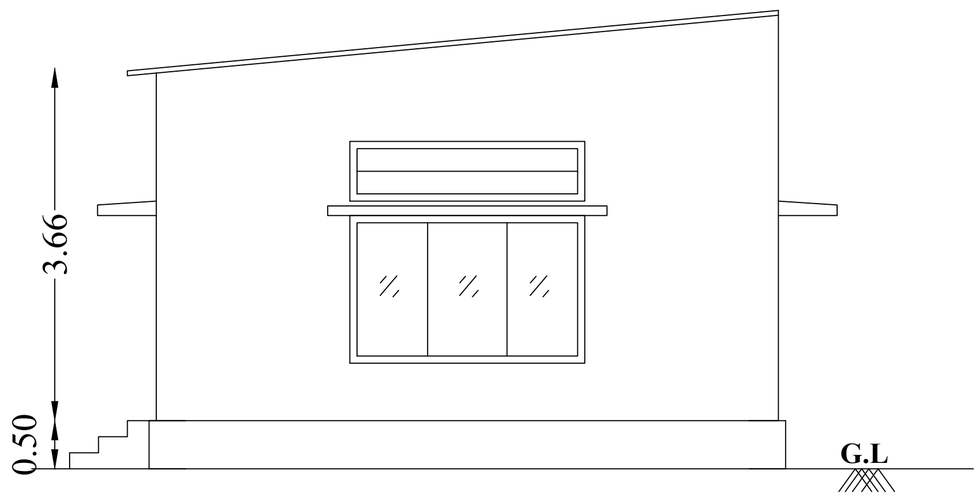

SOUTH SIDE ELEVATION

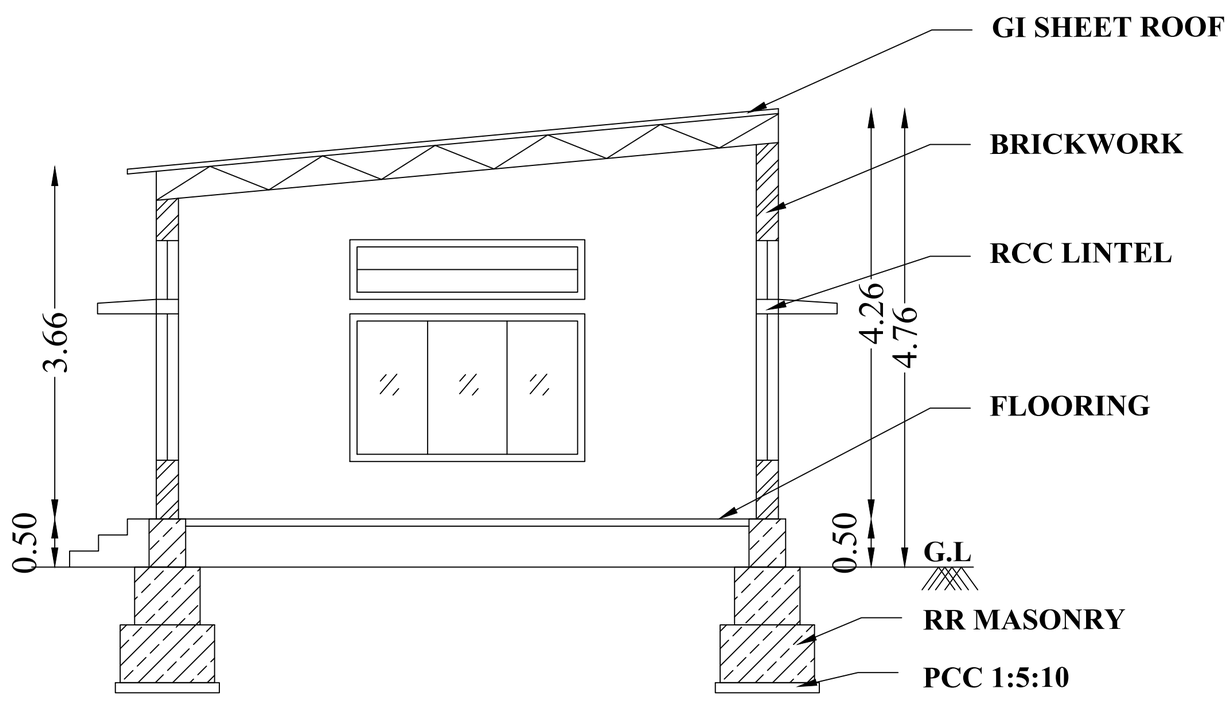

CROSS SECTION ON 'AA'

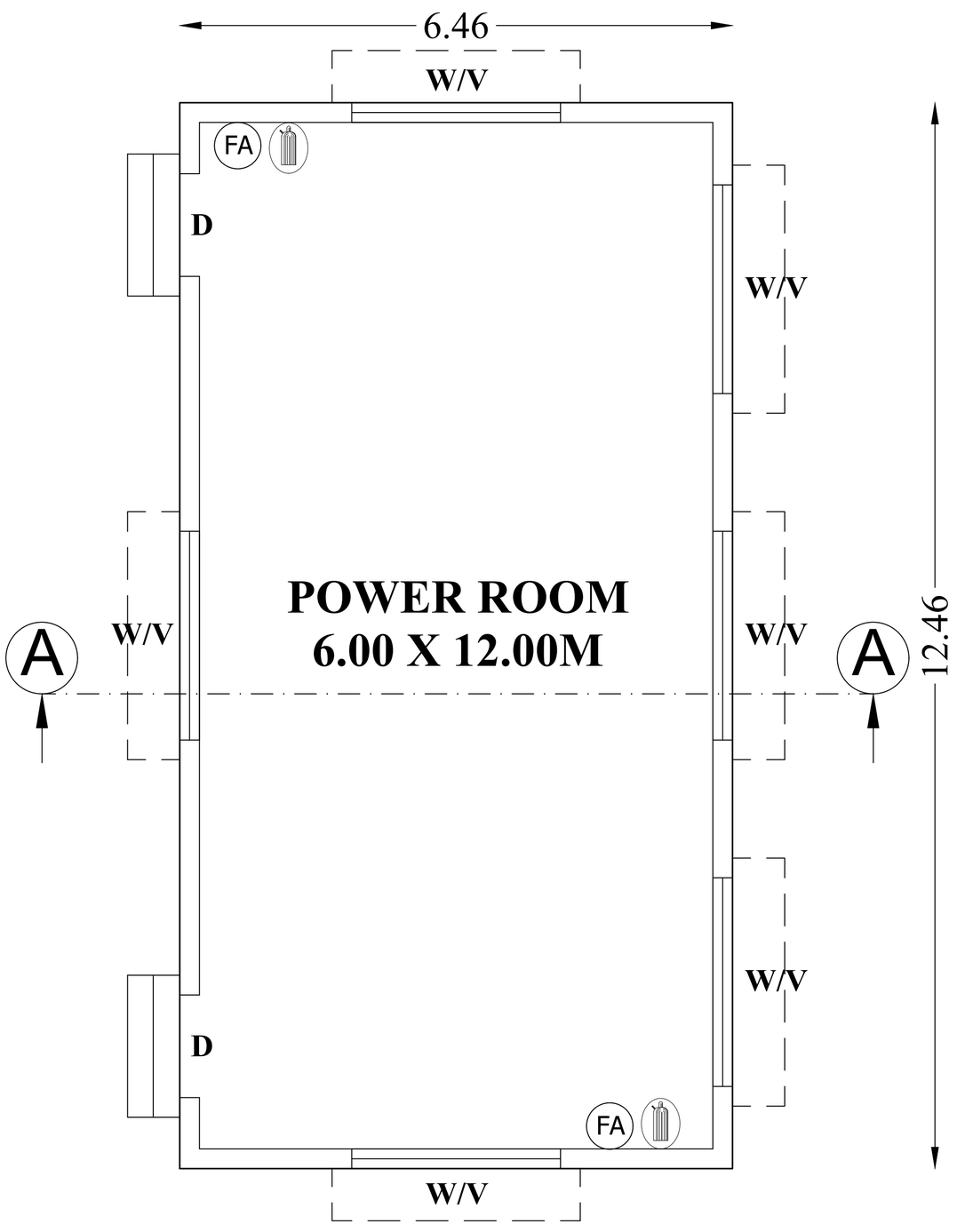

GROUND FLOOR PLAN

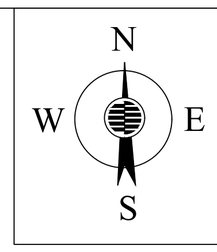

TTK PRESTIGE LIMITED

GROUND FLOOR PLAN SHOWING THE PROPOSED POWER ROOM BUILDING IN S.F.NO.448/1 OF ARISIPALAYAM VILLAGE, MADUKKARAI TALUK, COIMBATORE DISTRICT.

SCALE = 1:100

AREA DETAILS	AREA IN SQ.M	AREA IN SQ.FT
AREA OF THE GROUND FLOOR	81	872

JOINERY DETAILS

Sym.	DESCRIPTION	IN METRE
D	DOOR	1.22 X 2.13
W	WINDOW	2.44 X 1.52
V	VENTILATOR	2.44 X 0.61

NOTE :

ALL DIMENSIONS ARE IN METRE UNLESS OTHERWISE STATED

(FA) - FIRE FIGHTING EXTINGUISHER

(FA) - FIRE ALARM

Er. R. LOGANATHAN M.E., (STRUCT.) M.I.E.,
Chartered Engineer (M 166362-1)
Coimbatore LPA/SE/GR-I/19/04/033
No.38, 1st Street, Sivaji Colony Extn.
Edayarpalayam (Post), Coimbatore - 641 025

STRUCTURAL ENGINEER

Er. S. JANARTHANAN, ME., FIV
Registered Engineer Grade-I (RE)
Coimbatore LPA/RE/GR-I/19/03/007
22/47, Mariamman Koil Street, Sowripalayam,
Coimbatore-641 028.

ENGINEER / L.B.S

For TTK PRESTIGE LTD.

R. Azhagesen
General Manager – Operations

APPLICANT

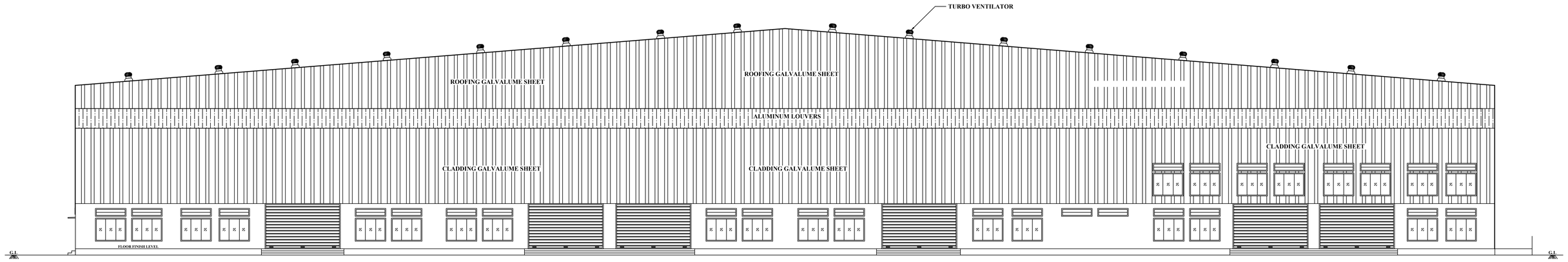

FRONT ELEVATION

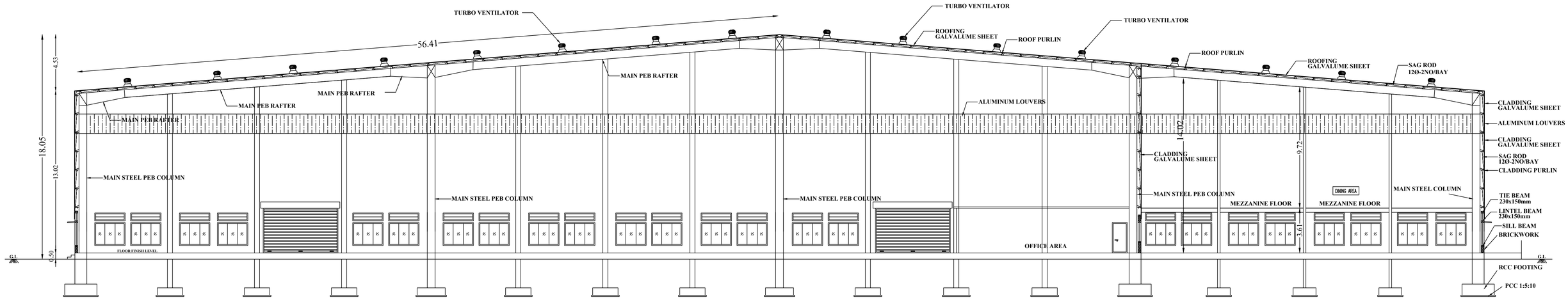

CROSS SECTION ON 'AA'

TTK PRESTIGE LIMITED

SECTION & ELEVATION SHOWING THE PROPOSED PRODUCTION & STORAGE BLOCK IN S.F.NO.448/1 OF ARISIPALAYAM VILLAGE, MADUKKARAI TALUK, COIMBATORE DISTRICT.

SCALE = 1:100



JOINERY DETAILS

Sym.	DESCRIPTION	IN METRE
RS	MAIN DOOR	6.00 X 3.60
D	DOOR	1.22 X 2.13
D1	DOOR	1.00 X 2.13
D2	DOOR	0.76 X 2.13
W	WINDOW	2.44 X 1.83
W1	WINDOW	1.83 X 1.83
V	VENTILATOR	2.44 X 0.61
V1	VENTILATOR	1.83 X 0.61

NOTE :

- FIRE FIGHTING EXTINGUISHER
- FA - FIRE ALARM

ALL DIMENSIONS ARE IN METRE UNLESS OTHERWISE STATED

Er. R. LOGANATHAN M.E., (STRUCT.) M.I.E.,
Chartered Engineer (M 163362-1)
Coimbatore LPA/SE/GR-919/04/33
No.38, 1st Street, Sivaji Colony Extn.
Edayarpalayam (Post), Coimbatore - 641 025

STRUCTURAL ENGINEER

Er. S. JANARTHANAN, ME., FIV
Registered Engineer Grade-I (RE)
Coimbatore LPA/RE/GR-919/03/007
22/47, Mariamman Koil Street, Sowripalayam,
Coimbatore-641 028.

ENGINEER / L.B.S

For TTK PRESTIGE LTD.
R. Azhagesen
General Manager – Operations

APPLICANT

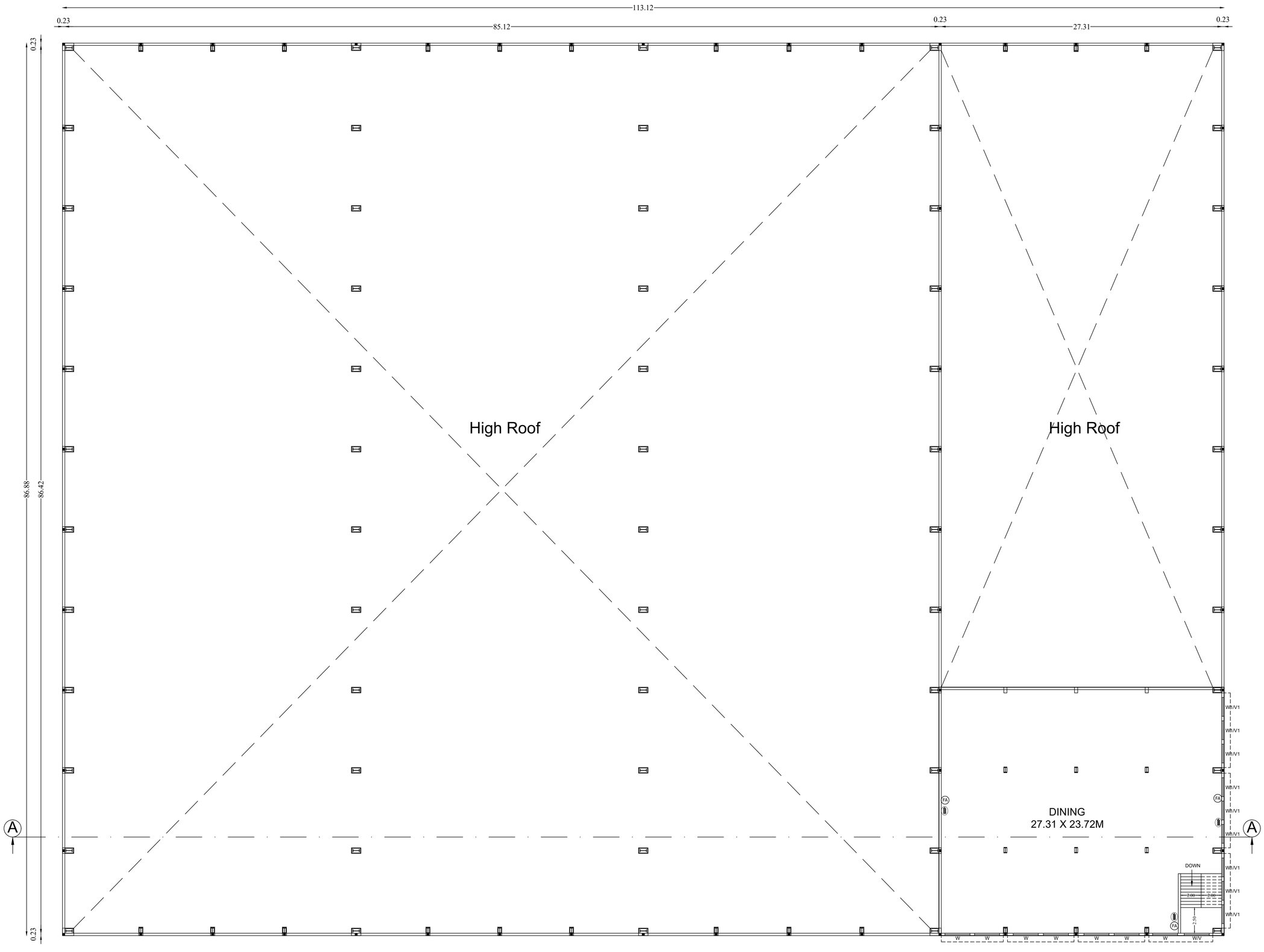

MEZZANINE FLOOR PLAN

TTK PRESTIGE LIMITED

MEZZANINE FLOOR PLAN SHOWING THE PROPOSED PRODUCTION & STORAGE BLOCK IN S.F.NO.448/1 OF ARISIPALAYAM VILLAGE, 4MADUKKARAI TALUK, COIMBATORE DISTRICT.

SCALE = 1:100

N
W E
S

AREA DETAILS	AREA IN SQ.M	AREA IN SQ.FT
AREA OF THE MEZZANINE FLOOR	672	7,233

JOINERY DETAILS

Sym.	DESCRIPTION	IN METRE
RS	MAIN DOOR	6.00 X 3.60
D	DOOR	1.22 X 2.13
D1	DOOR	1.00 X 2.13
D2	DOOR	0.76 X 2.13
W	WINDOW	2.44 X 1.83
W1	WINDOW	1.83 X 1.83
V	VENTILATOR	2.44 X 0.61
V1	VENTILATOR	1.83 X 0.61

NOTE :

(FA) - FIRE FIGHTING EXTINGUISHER

(FA) - FIRE ALARM

ALL DIMENSIONS ARE IN METRE UNLESS OTHERWISE STATED

Er. R. LOGANATHAN M.E., (STRUCT.) M.IE.
Chartered Engineer (M 162362-1)
Coimbatore LPA/SE/GR-II/3/04C33
No.38, 1st Street, Sivaji Colony Extn.
Edayarpalayam (Post), Coimbatore - 641 025

STRUCTURAL ENGINEER

Er. S. JANARTHANAN, ME., FIV
Registered Engineer Grade-I (RS)
Coimbatore LPA/RE/GR-II/18/3/007
22/47, Mariamman Koil Street, Sowripalayam,
Coimbatore-641 028.

ENGINEER / L.B.S

For TTK PRESTIGE LTD.
R. Azhagesan
General Manager – Operations

APPLICANT

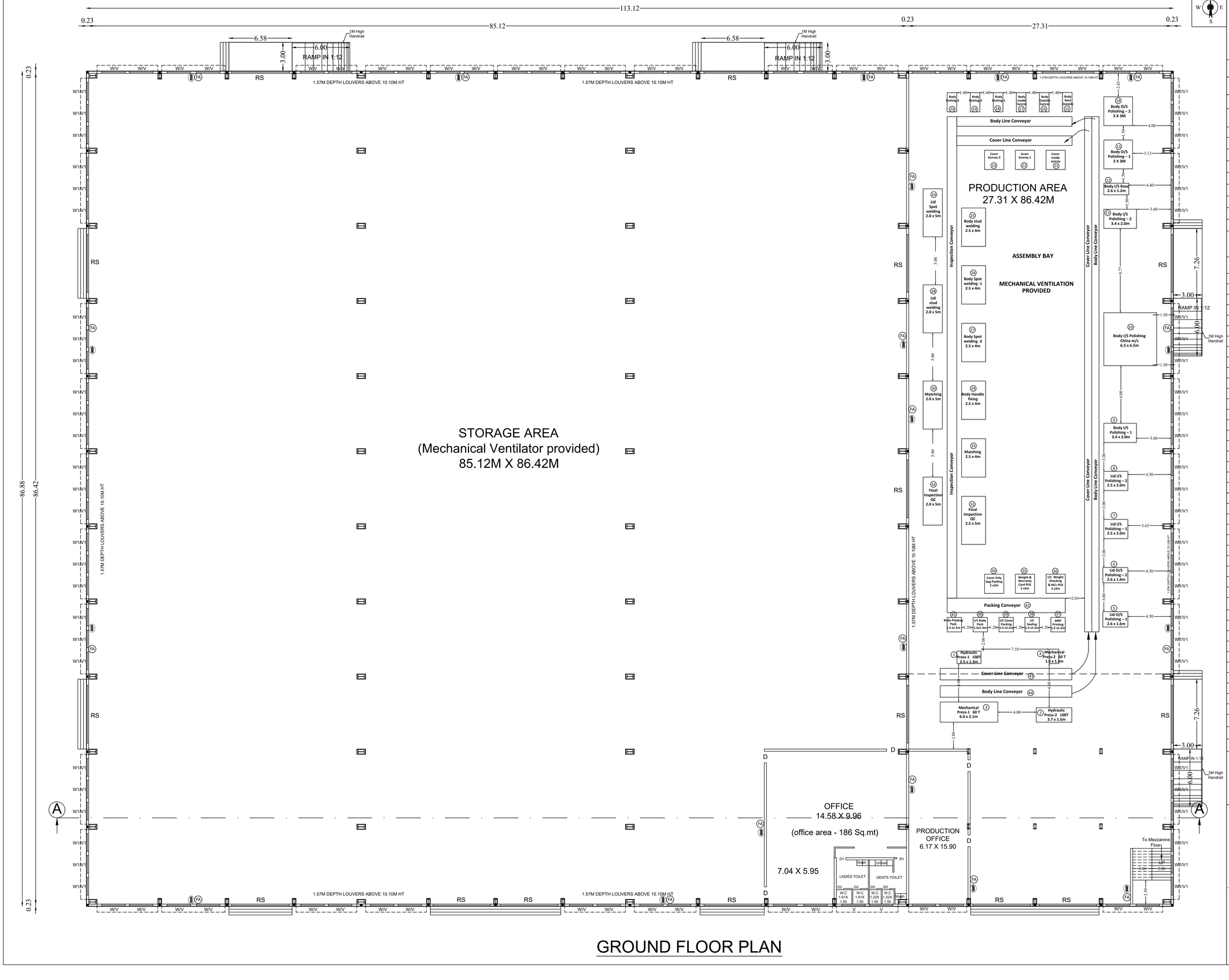

GROUND FLOOR PLAN

TTK PRESTIGE LIMITED

GROUND FLOOR PLAN SHOWING THE PROPOSED PRODUCTION & STORAGE BLOCK IN S.F.NO.448/1 OF ARISIPALAYAM VILLAGE, MADUKKARAI TALUK, COIMBATORE DISTRICT.

SCALE = 1:100

AREA DETAILS	AREA IN SQ.M	AREA IN SQ.FT
AREA OF THE GROUND FLOOR	9,828	1,05,788

JOINERY DETAILS

Sym.	DESCRIPTION	IN METRE
RS	MAIN DOOR	6.00 X 3.60
D	DOOR	1.22 X 2.13
D1	DOOR	1.00 X 2.13
D2	DOOR	0.76 X 2.13
W	WINDOW	2.44 X 1.83
W1	WINDOW	1.83 X 1.83
V	VENTILATOR	2.44 X 0.61
V1	VENTILATOR	1.83 X 0.61

POWER DETAILS

Sl.No.	Name of the Machine	Power in kW	Power in HP
1	HYDRAULIC PRESS-1 100T	32.20	43.18
2	HYDRAULIC PRESS-2 100T	32.20	43.18
3	MECHANICAL PRESS-1 60T	4.07	5.46
4	MECHANICAL PRESS-2 60T	4.07	5.46
5	LID O/S POLISHING - 1	23.87	32.01
6	LID O/S POLISHING - 2	23.87	32.01
7	LID I/S POLISHING - 1	12.68	17.00
8	LID I/S POLISHING - 2	12.68	17.00
9	BODY I/S POLISHING - 1	7.46	10.00
10	BODY I/S POLISHING CHINA M/C	116.00	155.56
11	BODY I/S POLISHING-2	7.46	10.00
12	BODY I/S BASE	7.46	10.00
13	BODY O/S POLISHING – 1	37.30	50.02
14	BODY O/S POLISHING – 2	52.20	70.00
15	BODY BASE OUTSIDE	9.50	12.74
16	BODY OUTSIDE SUNRAY	1.50	2.01
17	BODY INSIDE SUNRAY	1.50	2.01
18	BODY ETCHING-1	0.02	0.03
19	BODY ETCHING-2	0.02	0.03
20	BODY ETCHING-3	0.02	0.03
21	COVER INSIDE SUNRAY	1.50	2.01
22	COVER SUNRAY-1	1.50	2.01
23	COVER SUNRAY-2	1.50	2.01
24	LID SPOT WELDING	50.00	67.05
25	BODY STUD WELDING	2.00	2.68
26	BODY SPOT WELDING -1	50.0	67.05
27	BODY SPOT WELDING -2	50.0	67.05
28	LID STUD WELDING	2.00	2.68
29	BODY HANDLE FIXING	-	-
30	MATCHING	2.20	2.95
31	MATCHING	-	-
32	FINAL INSPECTION QC	-	-
33	FINAL INSPECTION QC	-	-
34	COVER POLY BAG PACKING	-	-
35	WEIGHT & WARRANTY CARD PACK	-	-
36	I/C WEIGHT CHECKING & M/C PACK	-	-
37	MRP PRINTING	0.03	0.04
38	I/C SEALING	1.00	1.34
39	I/C COVER PACKING	-	-
40	I/C BODY PACK	-	-
41	BODY POLYBAG PACK	-	-
42	PACKING CONVEYOR	2.20	2.95
43	COVER LINE CONVEYOR	2.20	2.95
44	BODY LINE CONVEYOR	2.20	2.95
	TOTAL	**554.41**	**743.46**

NOTE :

- (FE) - FIRE FIGHTING EXTINGUISHER
- (FA) - FIRE ALARM

ALL DIMENSIONS ARE IN METRE UNLESS OTHERWISE STATED

Er. R. LOGANATHAN M.E., (STRUCT.) M.I.E.
Chartered Engineer (M-163363-1)
Coimbatore LPA/SE/GR-I/1/24/233
No.38, 1st Street, Sivaji Colony Extn.
Edayarpalayam (Post), Coimbatore - 641 025
STRUCTURAL ENGINEER

Er. S. JANARTHANAN, ME., FIV
Registered Engineer Grade-I (RE)
Coimbatore LPA/RE/GR-I/919/03/007
2247, Mahamma Kid Street, Sowripalayam,
Coimbatore-641 028.
ENGINEER / L.B.S

For TTK PRESTIGE LTD.
R. Azhagesan
General Manager – Operations
APPLICANT

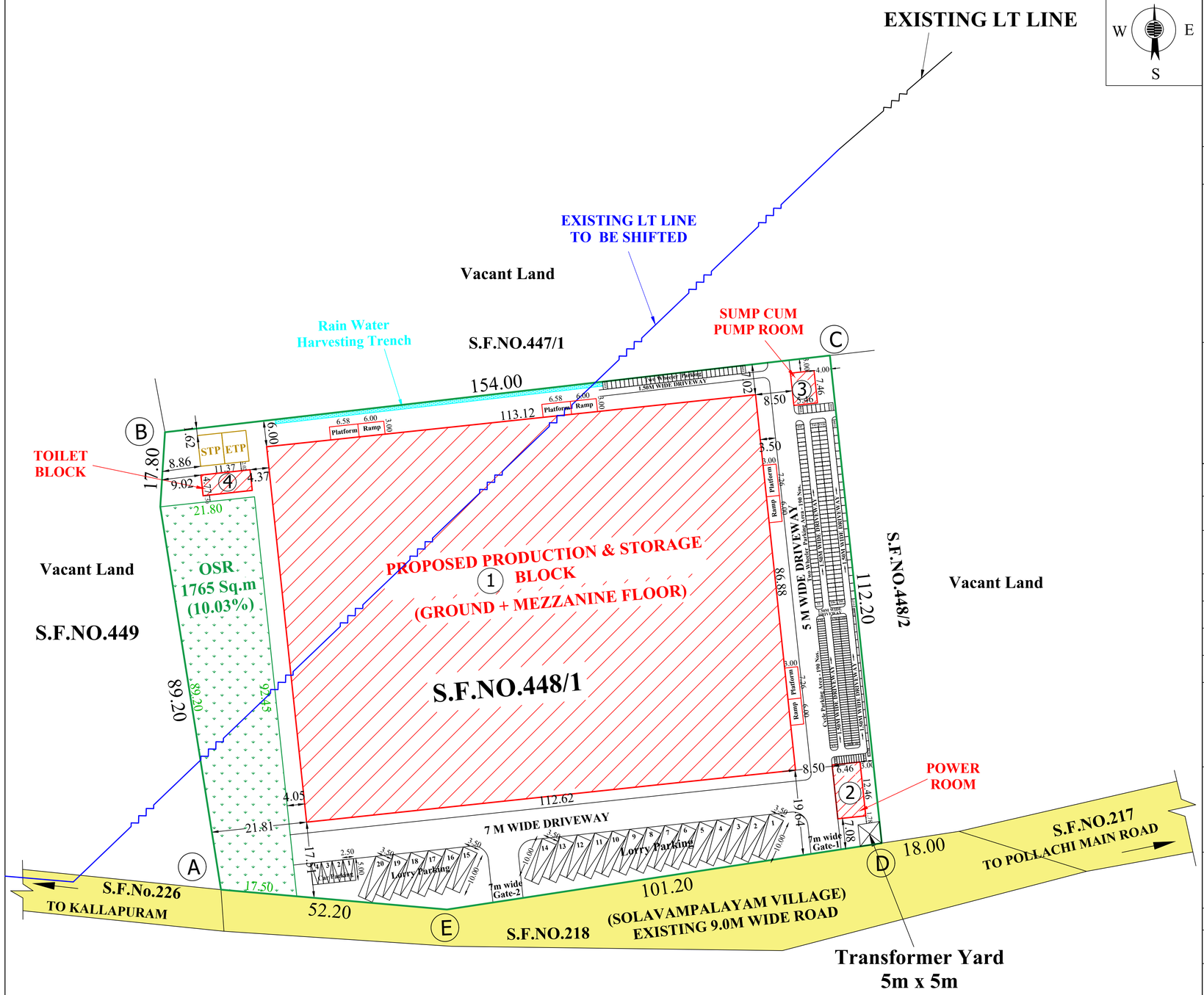

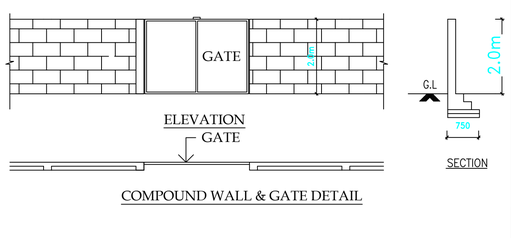

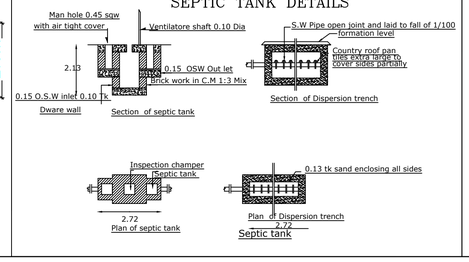

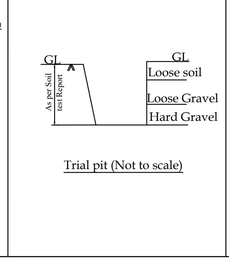

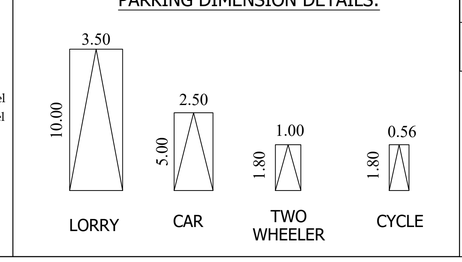

TTK PRESTIGE LIMITED

SITE PLAN SHOWING PROPOSED HOME APPLIANCES MANUFACTURING INDUSTRIAL BUILDING (GREEN CATEGORY) IN S.F.NO.448/1 OF ARISIPALAYAM VILLAGE, MADUKKARAI TALUK, COIMBATORE DISTRICT.

SCALE : 1: 600

LAND AREA DETAILS :

INDUSTRIAL USE LAND AREA DETAILS :

SL.NO.	S.F.NO.	LAND AREA IN ACRE		PATTA NO.
		As per Document	As per Chitta	
1	448/1	4.340 (or) 1.76.0 Hec.	4.340 (or) 1.76.0 Hec.	1891

REFERENCE

– APPROVAL SITE BOUNDARY (ABCDE)
– EXISTING ROAD
– OPEN SPACE RESERVATION
– PROPOSED BUILDING

BUILDING AREA DETAILS (AREA IN SQ.MT)

BLOCK NO.	NAME OF THE BLOCK	GROUND FLOOR	MEZZANINE FLOOR	TOTAL AREA	FSI AREA	NON FSI AREA
1	PRODUCTION & STORAGE BLOCK	9,828	672	10,500	10,500	–
2	POWER ROOM	81	–	81	81	–
3	SUMP CUM PUMP ROOM	41	–	41	41	–
4	TOILET BLOCK	68	–	68	68	–
	TOTAL	10,018	672	10,677	10,690	–

FSI & PC CALCULATION :

FSI = $\frac{10,690}{17,600}$ = 0.607 PC = $\frac{10,018}{17,600}$ X 100% = 56.92 %

OSR DETAILS:

OSR AREA REQUIRED @ 10% OF SITE AREA = 1760 SQ.MT
OSR AREA PROVIDED (10.04%) = 1765 SQ.MT

PARKING DETAILS:

WORKSHOP AREA = 9478 SQ.MT OFFICE AREA = 186 SQ.MT

DESCRIPTION	PARKING REQUIREDMENT	REQUIRED	PROVIDED
CAR	1 Car space for every a 100 Sq.m of Office floor area	186/100 = 2 Nos.	4 Nos.
LORRY	1 Lorry space for every a 500 Sq.m of workshop floor area	9478/500 = 19 Nos.	20 Nos.
TWO WHEELER	1 Two wheeler space for every a 50 Sq.m of workshop floor area	9478/50 = 190 Nos.	191 Nos.
CYCLE	1 Cycle space for every a 50 Sq.m of workshop floor area	9478/50 = 190 Nos.	191 Nos.

Er. R. LOGANATHAN M.E., (STRUCT.) M.I.E., Chartered Engineer (M 163362-1) Coimbatore LPA/SE/GR-I/19/04/C33 No.38, 1st Street, Sivaji Colony Extn. Edayarpalayam (Post), Coimbatore - 641 025
STRUCTURAL ENGINEER

Er. S. JANARTHANAN, ME., FIV Registered Engineer Grade-I (RE) Coimbatore LPA/RE/GR-I/19/03/007 22/47, Mariamman Koil Street, Sowripalayam, Coimbatore-641 028.
ENGINEER / L.B.S

For TTK PRESTIGE LTD
R. Azhagesen
General Manager – Operations
APPLICANT

THE LANDLENS SUITE

Eight ways to know a piece of land before you pay for it.

This report covers one part of the picture. These cover the rest, drawn from the same government records, for any property in Tamil Nadu.

LandLens One
Ask anything about a property and get an answer grounded in live government records, with the sources shown.
/landlens/one

Verify My Land
Every record check run on one property and returned as a single report.
/landlens/verify-my-land

Legal Opinion
An advocate's written opinion on the title, built on the records we pull for it.
/landlens

One Map
Every layer on one map: the parcel, its boundary, zoning, water bodies and what sits around it.
/landlens/one/map

PriceMap
What land actually changed hands for around this plot, taken from the registered deeds.
/landlens/pricemap

Build Scope
What you are allowed to build here: floor space, height, coverage and setbacks.
/landlens/build-scope

Property Tracker
Watch a property and hear about it when something new is registered against it.
/landlens/property-tracker

Deal Room
Run the transaction in one place: documents, stamping, signatures and the parties.
/landlens/deal-room

FREE TOOLS · NO ACCOUNT NEEDED

Twenty-four checks you can run yourself, at no cost.

Records and verification

The registers themselves, read for you.

- Encumbrance Certificate
- Patta and Chitta
- Field Measurement Sketch
- EC Analyzer
- Bank charge check
- Court case search
- Seller background check
- Approval check by survey

Value and duty

What it is worth and what it costs to register.

- Guideline value by street
- Guideline value by survey
- Stamp duty and registration fees
- Capital gains
- Floor space index
- Area unit converter

Zoning and land use

What the plan says can happen on this land.

- Land use zone finder
- CMDA land use check
- Coastal regulation zone
- Master plan check
- Water bodies finder
- Airport height clearance

Registers and directories

Who holds it, and which office keeps the record.

- Find your registering office
- Temple property check
- Waqf property check
- RERA register

Every free tool
/tools

Services we run for you
/services

The LandLens suite
/landlens/one

Verified RealEstate™

Every claim in this document traces back to a government record.

- Legal opinions, due diligence and title verification
- Building plan, layout and sub-division approvals
- Completion and occupancy certificates, regularisation
- Escrow, negotiation and NRI property management
- Land survey, soil testing, architecture and construction

Verified RealEstate
3/350/2 Mettukuppam,
OMR Thoraipakkam,
Chennai 600 097, India
hello@verified.realestate
+91 9996 12 9996

Prepared from the registers named on the page each finding sits on. Where a register could not be read, this document says so in its place rather than leaving the gap to be read as a clean result.