Verified RealEstate™

REFERENCE
SWP/BPA/412766/2025

ISSUED
20 February 2025

PP APPROVAL RECORD

Planning Permission

Coimbatore

Coimbatore district, Tamil Nadu

APPROVAL TYPE
Building Plan

ISSUING AUTHORITY
DTCP

The approval as the planning authority issued it, reproduced in full behind this page.

An approval speaks to what was sanctioned, not to what was built. Completion is a separate record.

Verified RealEstate™
3/350/2 Mettukuppam,
OMR Thoraipakkam,
Chennai 600 097, India

hello@verified.realestate
+91 9996 12 9996
verified.realestate

DIGITALLY VERIFIED RECORD

PLAN SHOWING THE PROPOSED CONSTRUCTION OF G.I.SHEET ROOF SOAP MAKING INDUSTRIAL BUILDING (GREEN INDUSTRIES) WITH 140.00HP IN S.F.Nos.15 / 2A1 AT KONDAMPATTY VILLAGE, KINATHUKKDAVU TALUK, COIMBATORE.

FA - FIRST AID BOX
FE - FIRE EXTINGUISHER
EA - EMERGENCY ALARM
SB - SAND BUCKET

N

SCALE : 1 : 100

ALL DIMENSION ARE IN " METER "

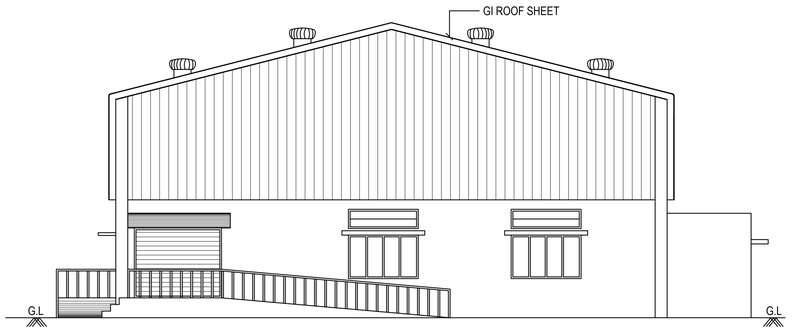

NORTH SIDE ELEVATION

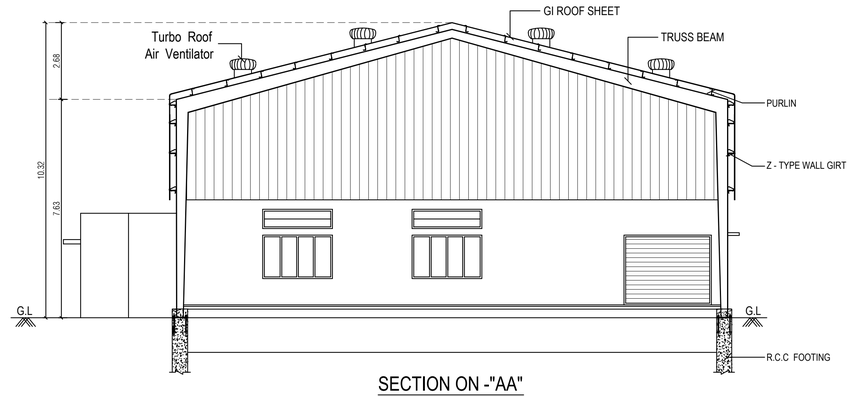

SECTION ON -"AA"

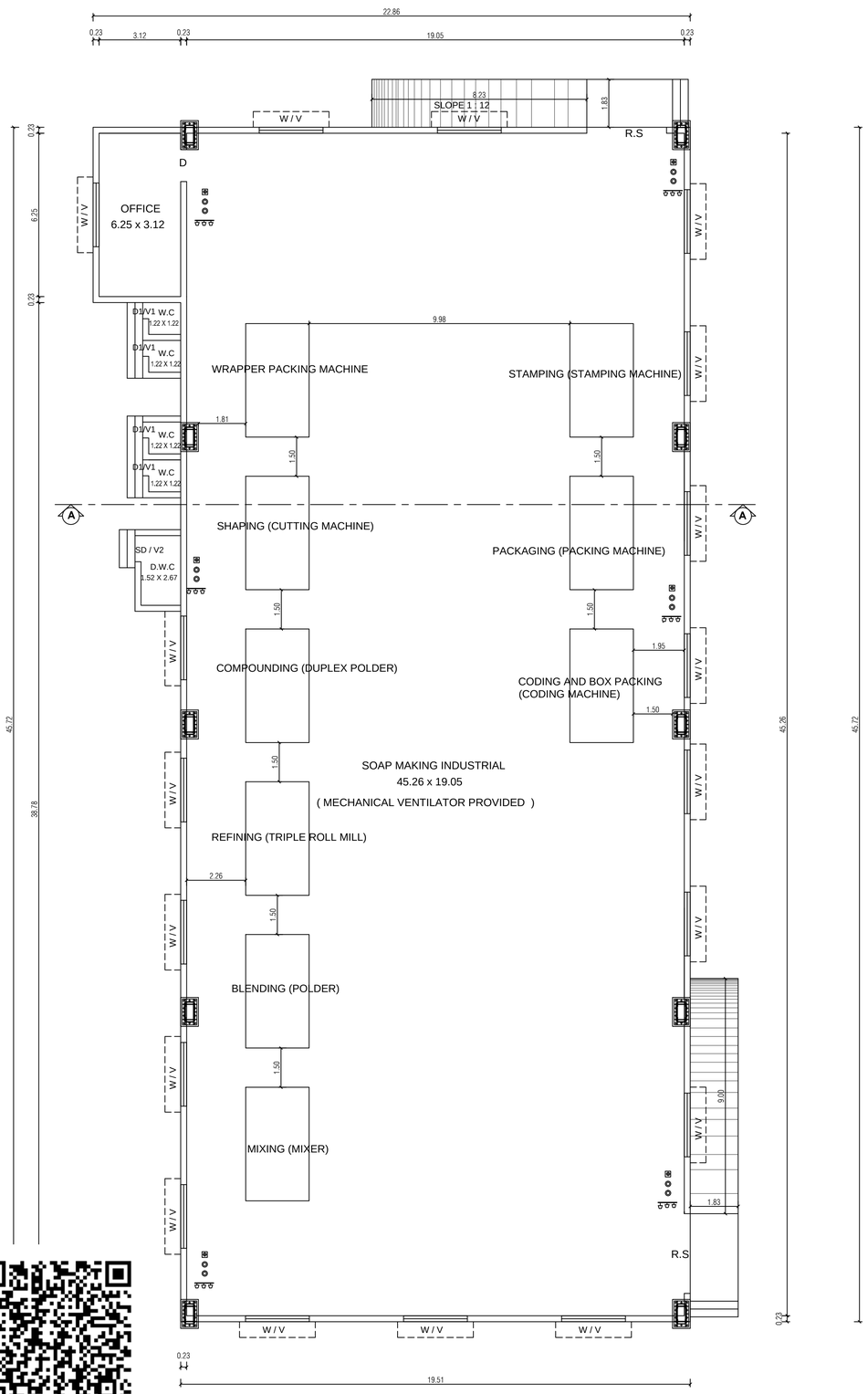

PLAN (INDUSTRIES)

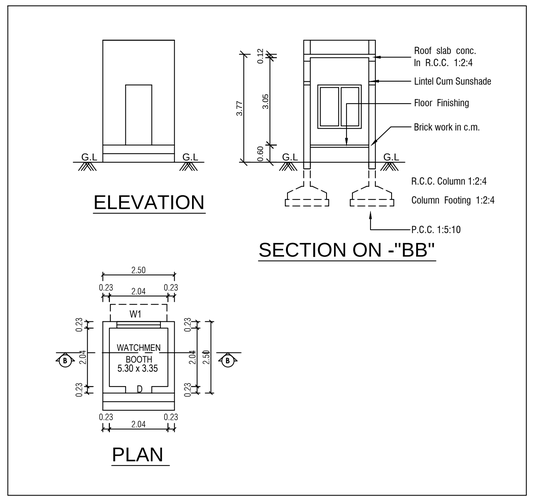

	SCHEDULE OF JOINERY	IN METER
RS	ROLLING SHUTTER	4.83 x 3.05
W	WINDOW	2.44 x 1.52
V	VENTILATOR	2.44 x 0.67
W1	WINDOW	1.52 x 1.52
D	DOOR	1.22 x 2.10

PRO.	MACHINARY DETAILS	POWER IN HP
1	WRAPPER PACKING MACHINE	5.00 HP
2	MIXING (MIXER)	30.00 HP
3	BLENDING (POLDER)	25.00 HP
4	REFINING (TRIPLE ROLL MILL)	25.00 HP
5	COMPOUNDING (DUPLEX POLDER)	25.00 HP
6	SHAPING (CUTTING MACHINE)	4.00HP
7	STAMPING (STAMPING MACHINE)	20.00 HP
8	PACKAGING (PACKING MACHINE)	4.00 HP
9	CODING AND BOX PACKING (CODING MACHINE)	2.00 HP
	TOTAL	140.00 HP

NO OF WORKERS		
1	WORKERS FOR INDUSTRIES	14
2	WORKERS FOR OFFICE	6
	TOTAL	20

Roc No : SWP / BPA / 0412766 / 2025
Site Boundary shown as "A to G" and numbered as
SWP / DTCP / COIMBATORE /
SWP / LP / R(C) No. 53 / 2025
SWP / BP / DTCPR(C) No.24 / 2025

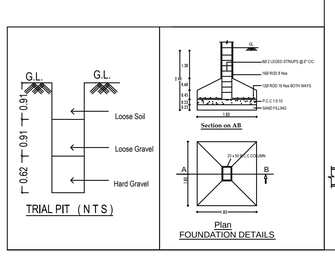

TRIAL PIT (N T S)

FOUNDATION DETAILS

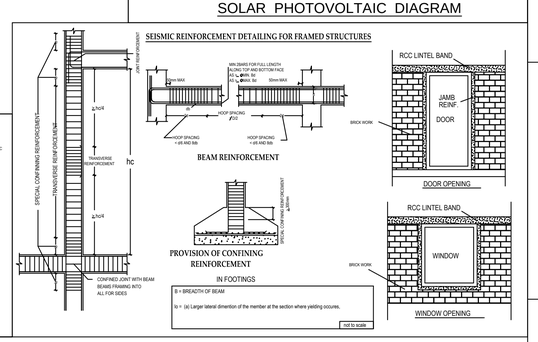

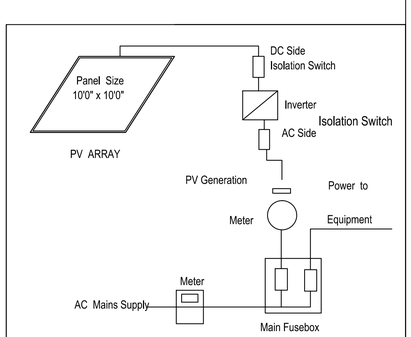

SOLAR PHOTOVOLTAIC DIAGRAM

ARCHITECT

STRUCTURAL ENGINEER

APPLICANT

S. KARTHICK
SURVEYOR / ASSITANT DRAUGHTS MAN

T. KANNAN
DRAUGHTS MAN

R . ROSALI SEBASTIAN
PLANNING ASSISTANT

SITE PLAN SHOWING THE PROPOSED CONSTRUCTION OF G.I.SHEET ROOF SOAP MAKING INDUSTRIAL BUILDING (GREEN INDUSTRIES) WITH 140.00HP IN S.F.Nos.15 / 2A1 AT KONDAMPATTY VILLAGE, KINATHUKKDAVU TALUK, COIMBATORE.

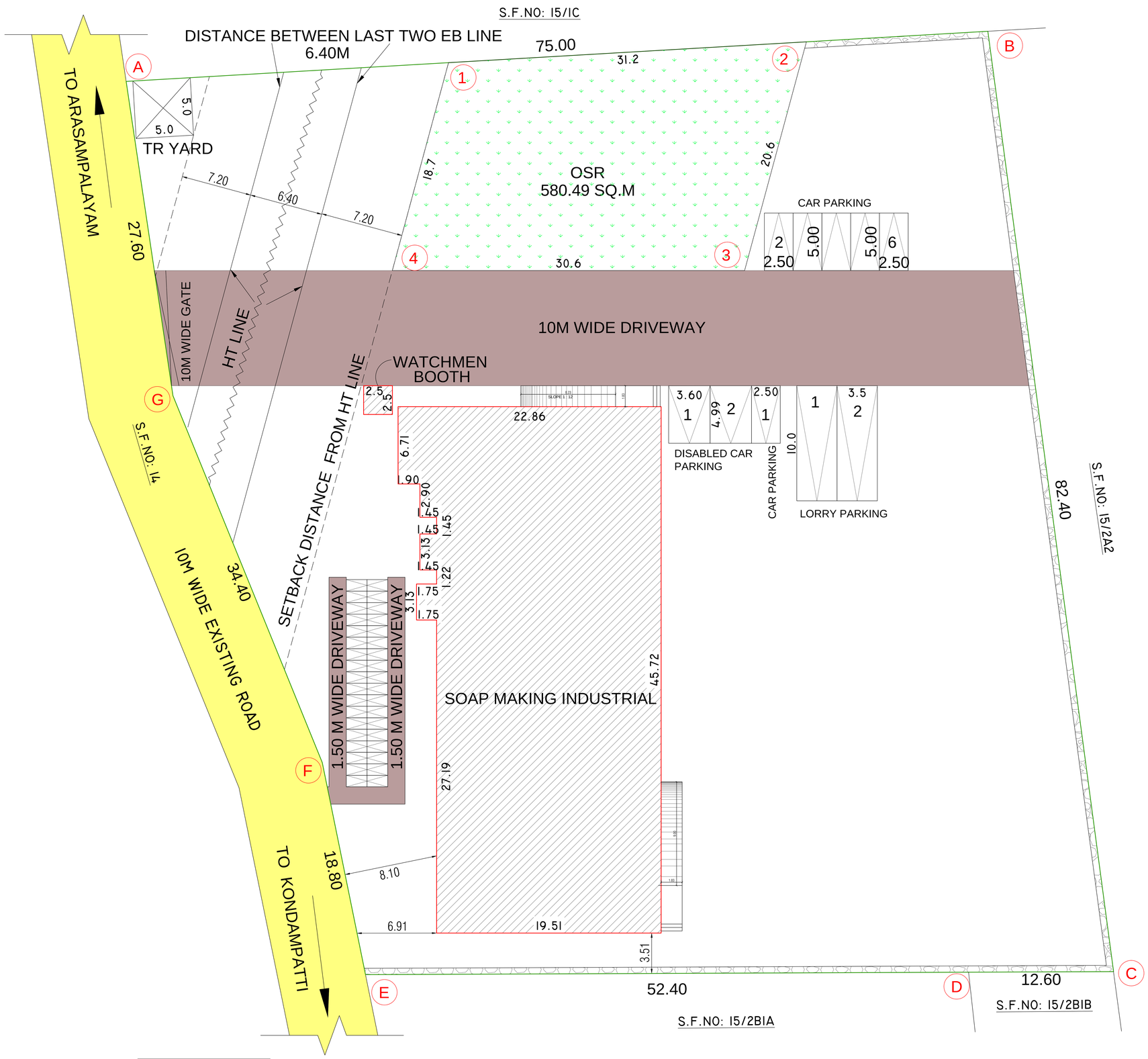

FA - FIRST AID BOX
FE - FIRE EXTINGUISHER
EA - EMERGENCY ALARM
SB - SAND BUCKET

N

SCALE : 1 : 100

ALL DIMENSION ARE IN " METER "

CATEGORY : GREEN INDUSTRIES

SITE AREA DETAILS

AREA OF THE SITE (AS PER PATTA)	5675.00 SQM
AREA OF THE SITE (AS PER DOCUMENT)	5675.00 SQM
AREA OF THE SITE (AS PER FIELD)	5671.70 SQM

BUILDING AREA DETAILS

FLOOR NAME	TOTAL BUILD UP AREA IN SQM.	NON FSI AREA IN SQM.	FSI AREA IN SQM.	HEIGHT OF BUILDING
SOAP MAKING INDUSTRIAL (BLOCK - A)				
GROUND FLOOR	928.54	---	928.54	10.32 M
TOTAL AREA	928.54	---	928.54	
WATCHMEN BOOTH (BLOCK - B)				
GROUND FLOOR	6.25	---	6.25	3.77 M
TOTAL AREA	6.25	---	6.25	
GRAND TOTAL AREA (A+B)				
GRAND TOTAL AREA	934.79	6.25	928.54	---

FSI AREA- $\frac{928.54}{5675.00}$ = 0.16 ≤ 1.50

	REQUIRED	PROVIDED
PARKING DETAILS :-	G.O.Ms. No.225, Housing and Urban Development [UD4(1)], 26th November 2024	G.O.Ms. No.225, Housing and Urban Development [UD4(1)], 26th November 2024
	1 car space for every 150sq.m of office floor area or part thereof and 1 two wheeler space and 1 cycle space for every 75sq.m of workshop floor area or part thereof and 1 lorryspace for every 750sqm or workshop floor area or part thereof	1 car space for every 150sq.m of office floor area or part thereof and 1 two wheeler space and 1 cycle space for every 75sq.m of workshop floor area or part thereof and 1 lorryspace for every 750sqm or workshop floor area or part thereof
WORKSHOP AREA	863.00 SQ.M	
OFFICE AREA	20.00 SQ.M	
DISABLED CAR PARKING	2	2
CAR PARKING	1	6
TWO WHEELER PARKING	12	18
CYCLE PARKING	12	18
LORRY PARKING	2	2
OSR PROVIDED	576.50 SQ.M (10 %)	580.49 SQ.M (10.01 %)

REFERENCE :

SITE BOUNDARY	-
PROPOSED BUILDING	-
DRIVE WAY	-
EXISTING ROAD	-
O.S.R	-

Roc No : SWP / BPA / 0412766 / 2025
Site Boundary shown as "A to G" and numbered as
SWP / DTCP / COIMBATORE /
SWP / LP / R(C) No. 53 / 2025
SWP / BP / DTCPR(C) No.24 / 2025

SOLAR PHOTOVOLTAIC DIAGRAM

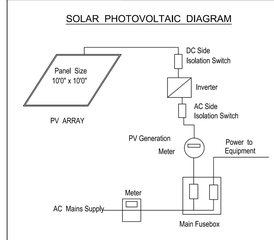

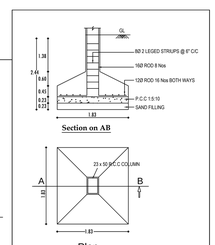

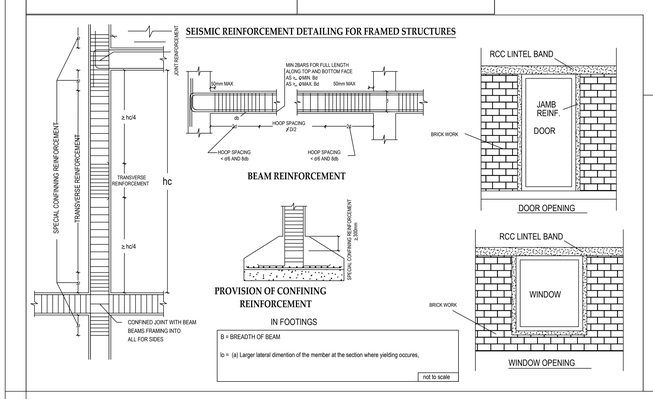

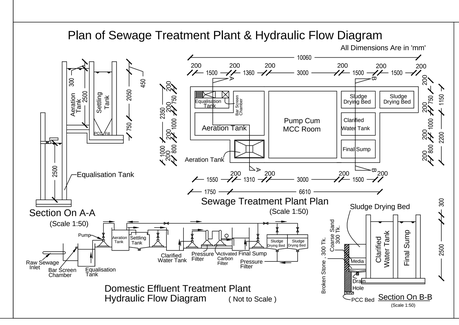

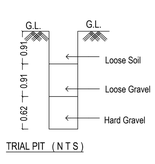

PRO.	MACHINARY DETAILS	POWER IN HP
1	WRAPPER PACKING MACHINE	5.00 HP
2	MIXING (MIXER)	30.00 HP
3	BLENDING (POLDER)	25.00 HP
4	REFINING (TRIPLE ROLL MILL)	25.00 HP
5	COMPOUNDING (DUPLEX POLDER)	25.00 HP
6	SHAPING (CUTTING MACHINE)	4.00HP
7	STAMPING (STAMPING MACHINE)	20.00 HP
8	PACKAGING (PACKING MACHINE)	4.00 HP
9	CODING AND BOX PACKING (CODING MACHINE)	2.00 HP
	TOTAL	140.00 HP

NO OF WORKERS		
1	WORKERS FOR INDUSTRIES	14
2	WORKERS FOR OFFICE	6
	TOTAL	120

ARCHITECT

STRUCTURAL ENGINEER

APPLICANT

S. KARTHICK
SURVEYOR / ASSITANT DRAUGHTS MAN

T. KANNAN
DRAUGHTS MAN

R . ROSALI SEBASTIAN
PLANNING ASSISTANT

THE LANDLENS SUITE

Eight ways to know a piece of land before you pay for it.

This report covers one part of the picture. These cover the rest, drawn from the same government records, for any property in Tamil Nadu.

LandLens One
Ask anything about a property and get an answer grounded in live government records, with the sources shown.
/landlens/one

Verify My Land
Every record check run on one property and returned as a single report.
/landlens/verify-my-land

Legal Opinion
An advocate's written opinion on the title, built on the records we pull for it.
/landlens

One Map
Every layer on one map: the parcel, its boundary, zoning, water bodies and what sits around it.
/landlens/one/map

PriceMap
What land actually changed hands for around this plot, taken from the registered deeds.
/landlens/pricemap

Build Scope
What you are allowed to build here: floor space, height, coverage and setbacks.
/landlens/build-scope

Property Tracker
Watch a property and hear about it when something new is registered against it.
/landlens/property-tracker

Deal Room
Run the transaction in one place: documents, stamping, signatures and the parties.
/landlens/deal-room

hello@verified.realestate · +91 9996 12 9996

FREE TOOLS · NO ACCOUNT NEEDED

Twenty-four checks you can run yourself, at no cost.

Records and verification

The registers themselves, read for you.

- Encumbrance Certificate
- Patta and Chitta
- Field Measurement Sketch
- EC Analyzer
- Bank charge check
- Court case search
- Seller background check
- Approval check by survey

Value and duty

What it is worth and what it costs to register.

- Guideline value by street
- Guideline value by survey
- Stamp duty and registration fees
- Capital gains
- Floor space index
- Area unit converter

Zoning and land use

What the plan says can happen on this land.

- Land use zone finder
- CMDA land use check
- Coastal regulation zone
- Master plan check
- Water bodies finder
- Airport height clearance

Registers and directories

Who holds it, and which office keeps the record.

- Find your registering office
- Temple property check
- Waqf property check
- RERA register

Every free tool
/tools

Services we run for you
/services

The LandLens suite
/landlens/one

Verified RealEstate™

Every claim in this document traces back to a government record.

- Legal opinions, due diligence and title verification
- Building plan, layout and sub-division approvals
- Completion and occupancy certificates, regularisation
- Escrow, negotiation and NRI property management
- Land survey, soil testing, architecture and construction

Verified RealEstate
3/350/2 Mettukuppam,
OMR Thoraipakkam,
Chennai 600 097, India
hello@verified.realestate
+91 9996 12 9996

Prepared from the registers named on the page each finding sits on. Where a register could not be read, this document says so in its place rather than leaving the gap to be read as a clean result.