PP APPROVAL RECORD

Planning Permission

Coimbatore district, Tamil Nadu

APPROVAL TYPE
Building Plan

ISSUING AUTHORITY
DTCP

The approval as the planning authority issued it, reproduced in full behind this page.

An approval speaks to what was sanctioned, not to what was built. Completion is a separate record.

Verified RealEstate™
3/350/2 Mettukuppam,
OMR Thoraipakkam,
Chennai 600 097, India

hello@verified.realestate
+91 9996 12 9996
verified.realestate

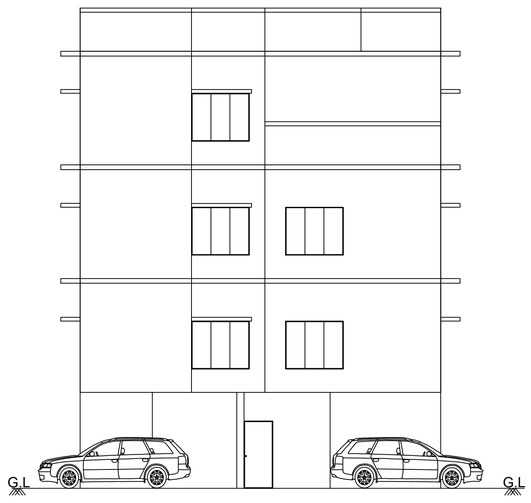

ELEVATION ON NORTH SIDE

Applicant Name	:	K Prabhavathi
Online Building Application No	:	SWP/BPA/848789/2026
Site Approval LP/CLPA NO	:	438/2026
Planning Permission NO	:	557/2026

Septic Tank Details

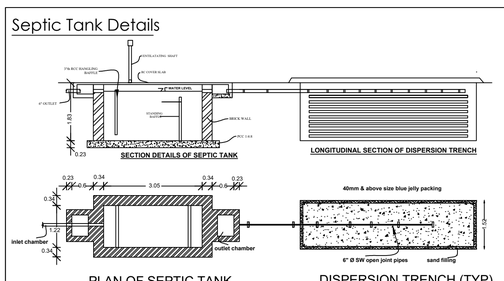

PLAN OF SEPTIC TANK (NOT TO SCALE)

DISPERSION TRENCH (TYP) (NOT TO SCALE)

Brick Work Details

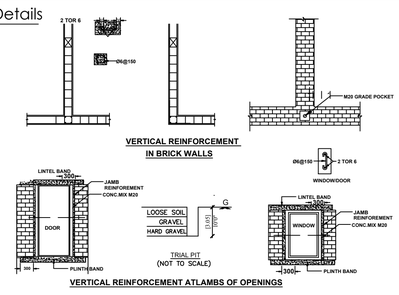

Staircase Details

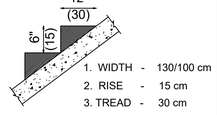

1. WIDTH - 130/100 cm
2. RISE - 15 cm
3. TREAD - 30 cm

Rain Water Harvesting

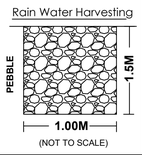

(NOT TO SCALE)

Foundation Details

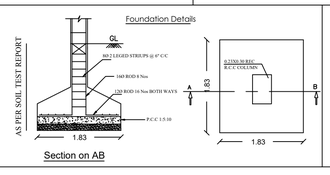

Section on AB

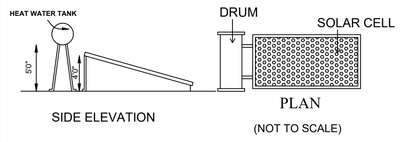

(NOT TO SCALE)

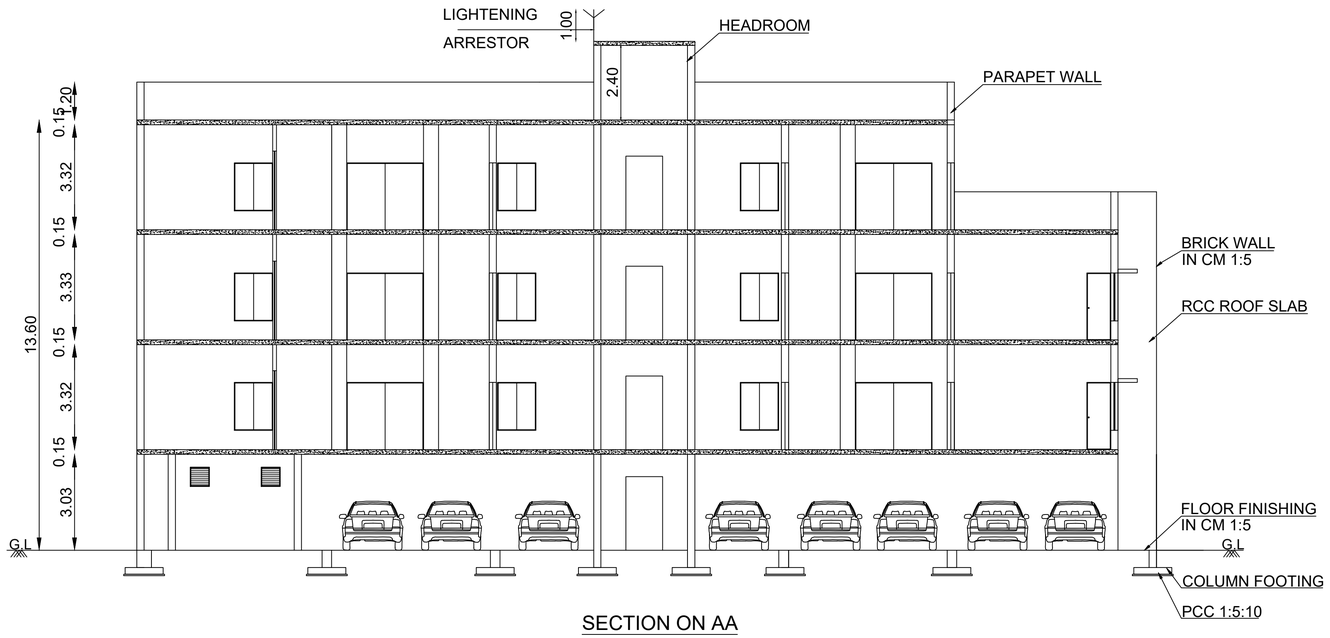

SECTION ON AA

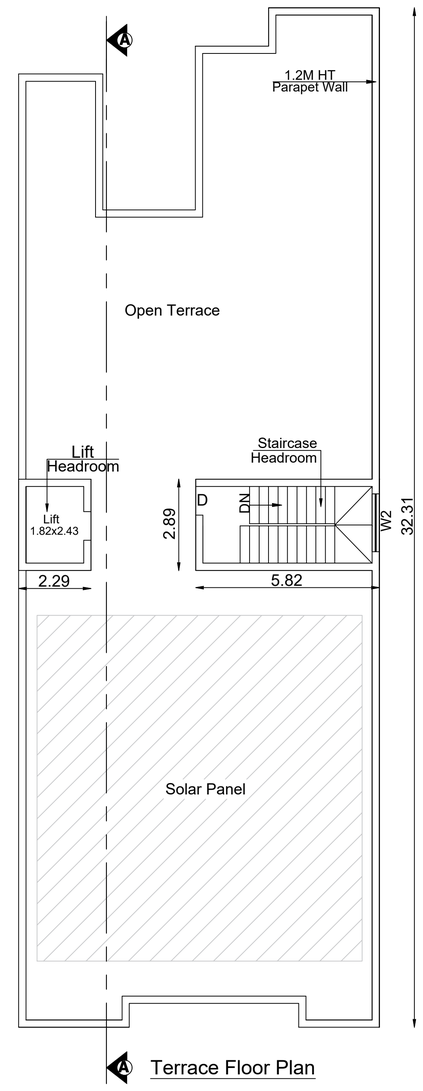

Terrace Floor Plan

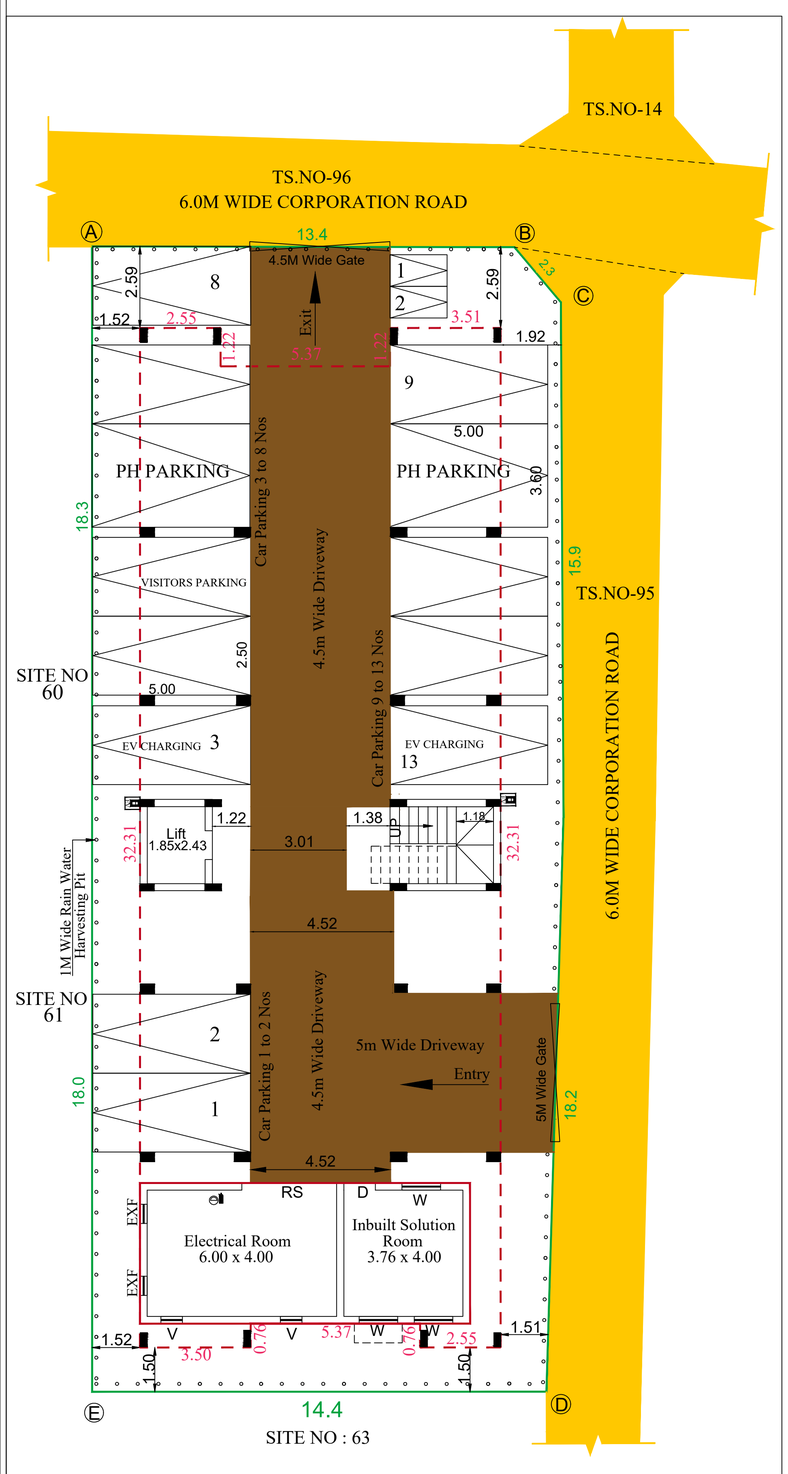

SITE NO : 63

Stilt Floor Plan

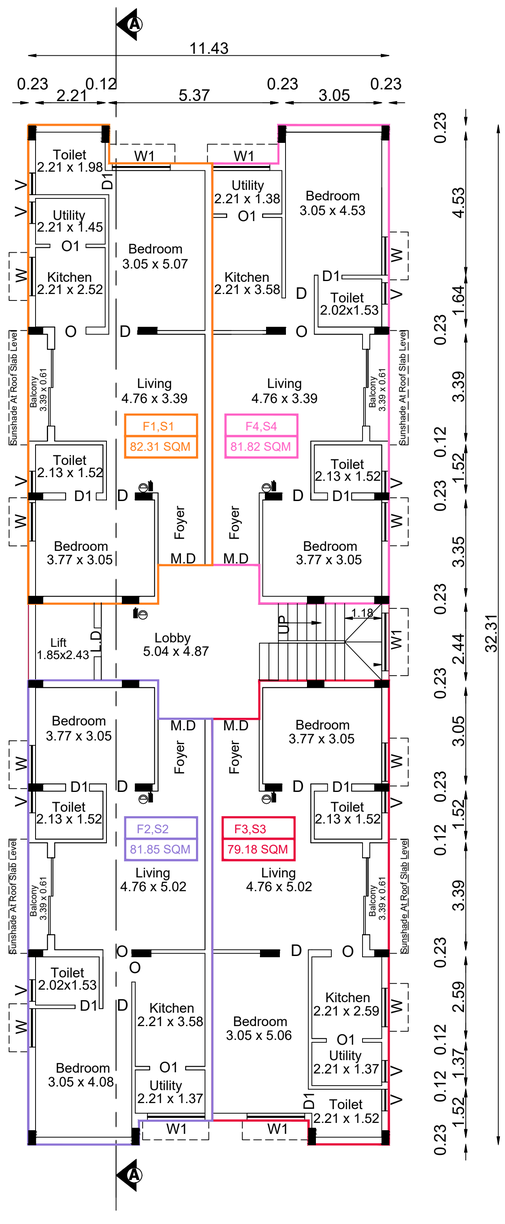

Typical First & Second Floor Plan

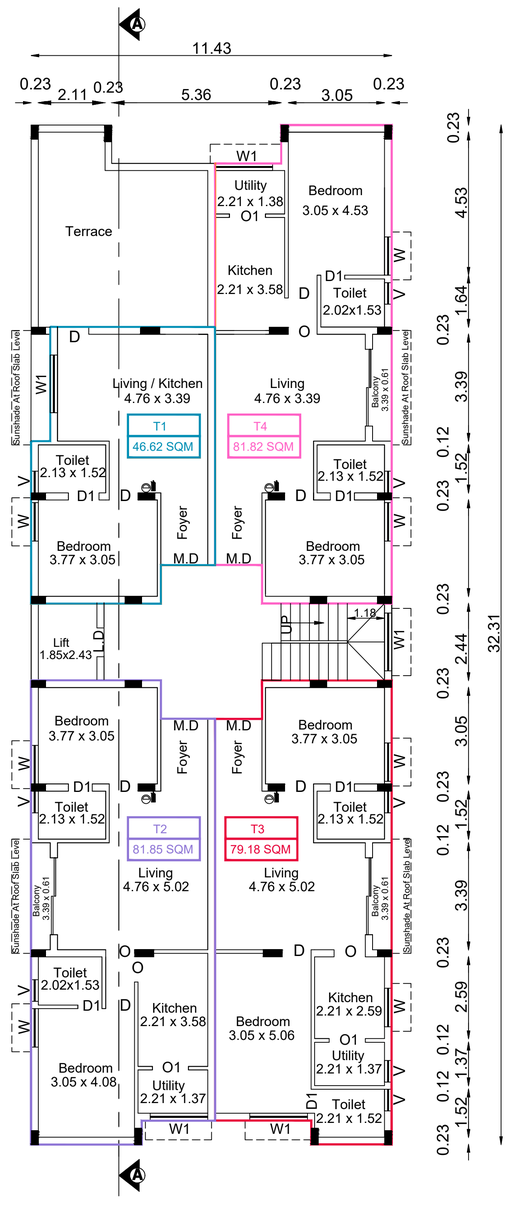

Third Floor Plan

PLAN SHOWING THE REVISED APPROVAL OF PROPOSED RESIDENTIAL BUILDING IN REGULARIZED SITE NO- 64 IN OLD S.F NO:274/3Apt ,TS.NO- 98, & SITE.NO-65,OLD SF.NO- 273/3pt & 274/3Apt,TS.NO-97, T.S WARD-AG (33) UPPILIPALAYAM, BLOCK NO-02, IN COIMBATORE SOUTH TALUK,COIMBATORE DISTRICT.

SINGANALLUR D.D.PLAN -1

Land Use As Per Masterplan - Residential

Land Use As Per D.Dplan - Residential

Scale 1:100

ALL DIMENSIONS ARE IN METERS

N

LAND AREA STATEMENT

AREA OF SITE AS PER TSLR	-	554.00 SQM
AREA OF SITE AS PER DOCUMENT	-	543.75 SQM

HEIGHT OF THE BUILDING = 13.60M

BUILDING AREA STATEMENT

S.NO	AREA DETAILS	FSI AREA IN SQM	NON FSI AREA IN SQM	TOTAL BUILTUP AREA IN SQM
1.	STILT FLOOR	46.40	312.24	358.64
2.	FIRST FLOOR	358.64	-	358.64
3.	SECOND FLOOR	358.64	-	358.64
4.	THIRD FLOOR	323.08	-	323.08
5.	TERRACE FLOOR	-	22.23	22.23
	GRAND TOTAL	1086.76	334.47	1421.23

TOTAL FSI = 1086.76 / 543.75 = 1.998

Parking Details: - (Stilt Floor To 3rd Floor)

Apartment - 12 Dwelling Units

Unit No	Floor	Area in Sqm	No. of Cars Required	No. of Cars Provided	No. of T.W Required	No. of T.W Provided
F1 & S1	1 to 2	82.31 x 2 = 164.62	12 Nos	13 Nos	1 Nos	2 Nos
T1	3	46.62 x 1 = 46.62				
F2,S2&T2	1 to 3	81.85 x 3 = 245.55				
F3,S3&T3	1 to 3	79.18 x 3 = 237.54				
F4,S4&T4	1 to 3	81.82 x 3 = 245.46				

JOINERY DETAILS:-

INDEX	DESCRIPTION	SIZE IN METER
M.D	MAIN DOOR	1.49 x 2.13
D	DOOR	0.91 x 2.13
D1	DOOR	0.76 x 2.13
L.D	LIFT DOOR	0.91 x 2.13
W	WINDOW	1.22 x 1.52
W1	WINDOW	1.83 x 1.52
V	VENTILATOR	0.61 x 0.61
O	OPEN	0.91 x 2.13
O1	OPEN	1.14 x 2.13
RS	ROLLING SHUTTER	3.00 x 2.13

REFERENCE:-

TSLR BOUNDARY

EXISTING ROAD

PROPSOED DRIVEWAY

PROPOSED BUILDING FOR APPROVAL

EV PROVISION WILL BE PROVIDED FOR PARKING UNITS

Er. S.PRABHAVATHI
M.E.(Geotech)., M.I.G.S., A.M.I.E.,
Registered Geotechnical Engineer
Reg. No: Coimbatore District/GTE/01/2025
No: 17/25-B, Annur Road, Karumathampatti
Coimbatore - 641 659
Ph: 0422-3592569 Mob: +91 9600558700

Geotechnical Engineer

Er. HARINI. P.S. ME.(Str)., MBA (HR).
Reg. No. Coimbatore LPA / SE / GR-I / 004 / 2022
PRIME PROPDOC CONSULTANTS PVT LTD
29, Palani Illam, Sundaram Brothers Layout,
Ramanathapuram, Coimbatore 641 045.
Ph 7373371000
E mail : harini.propdoc@gmail.com.

Structural Engineer

Er. HARINI. P.S.
Reg. No. Coimbatore LPA / RE / GR-I / 008 / 2022
PRIME PROPDOC CONSULTANTS PVT LTD
29, Palani Illam, Sundaram Brothers Layout,
Ramanathapuram, Coimbatore - 641 045.
Ph : 7373371000,
E mail : harini.propdoc@gmail.com.

Registered Engineer

K. Prabhavathi

Applicant

THE LANDLENS SUITE

Eight ways to know a piece of land before you pay for it.

This report covers one part of the picture. These cover the rest, drawn from the same government records, for any property in Tamil Nadu.

LandLens One
Ask anything about a property and get an answer grounded in live government records, with the sources shown.
/landlens/one

Verify My Land
Every record check run on one property and returned as a single report.
/landlens/verify-my-land

Legal Opinion
An advocate's written opinion on the title, built on the records we pull for it.
/landlens

One Map
Every layer on one map: the parcel, its boundary, zoning, water bodies and what sits around it.
/landlens/one/map

PriceMap
What land actually changed hands for around this plot, taken from the registered deeds.
/landlens/pricemap

Build Scope
What you are allowed to build here: floor space, height, coverage and setbacks.
/landlens/build-scope

Property Tracker
Watch a property and hear about it when something new is registered against it.
/landlens/property-tracker

Deal Room
Run the transaction in one place: documents, stamping, signatures and the parties.
/landlens/deal-room

FREE TOOLS · NO ACCOUNT NEEDED

Twenty-four checks you can run yourself, at no cost.

Records and verification

The registers themselves, read for you.

- Encumbrance Certificate
- Patta and Chitta
- Field Measurement Sketch
- EC Analyzer
- Bank charge check
- Court case search
- Seller background check
- Approval check by survey

Value and duty

What it is worth and what it costs to register.

- Guideline value by street
- Guideline value by survey
- Stamp duty and registration fees
- Capital gains
- Floor space index
- Area unit converter

Zoning and land use

What the plan says can happen on this land.

- Land use zone finder
- CMDA land use check
- Coastal regulation zone
- Master plan check
- Water bodies finder
- Airport height clearance

Registers and directories

Who holds it, and which office keeps the record.

- Find your registering office
- Temple property check
- Waqf property check
- RERA register

Every free tool
/tools

Services we run for you
/services

The LandLens suite
/landlens/one

Verified RealEstate™

Every claim in this document traces back to a government record.

- Legal opinions, due diligence and title verification
- Building plan, layout and sub-division approvals
- Completion and occupancy certificates, regularisation
- Escrow, negotiation and NRI property management
- Land survey, soil testing, architecture and construction

Verified RealEstate
3/350/2 Mettukuppam,
OMR Thoraipakkam,
Chennai 600 097, India
hello@verified.realestate
+91 9996 12 9996

Prepared from the registers named on the page each finding sits on. Where a register could not be read, this document says so in its place rather than leaving the gap to be read as a clean result.