PP APPROVAL RECORD

# Planning Permission

## Survey 340

C N Palayam

Cuddalore district, Tamil Nadu

APPROVAL TYPE
**Building Plan**

ISSUING AUTHORITY
**Rural Panchayat**

The approval as the planning authority issued it, reproduced in full behind this page.

An approval speaks to what was sanctioned, not to what was built. Completion is a separate record.

Verified RealEstate™

3/350/2 Mettukuppam,
OMR Thoraipakkam,
Chennai 600 097, India

hello@verified.realestate

+91 9996 12 9996

verified.realestate

PLAN SHOWING THE PROPOSED CONSTRUCTION OF RCC ROOF RESIDENTIAL BUILDING INPATTA S.NO : 340/9, 340/10, OLD S.NO : 110/1, DOOR NO : 4/6, CHOKKANATHAN PETTAI STREET, CHINNAPPA NAICKENPALAYAM VILLAGE & PANCHAYAT, CUDDALORE PANCHAYAT UNION, CUDDALORE TALUK & DISTRICT.

OWNERS NAME : Mr.M.N.ARUMUGAM S/o. Mr.NARAYANASAMY

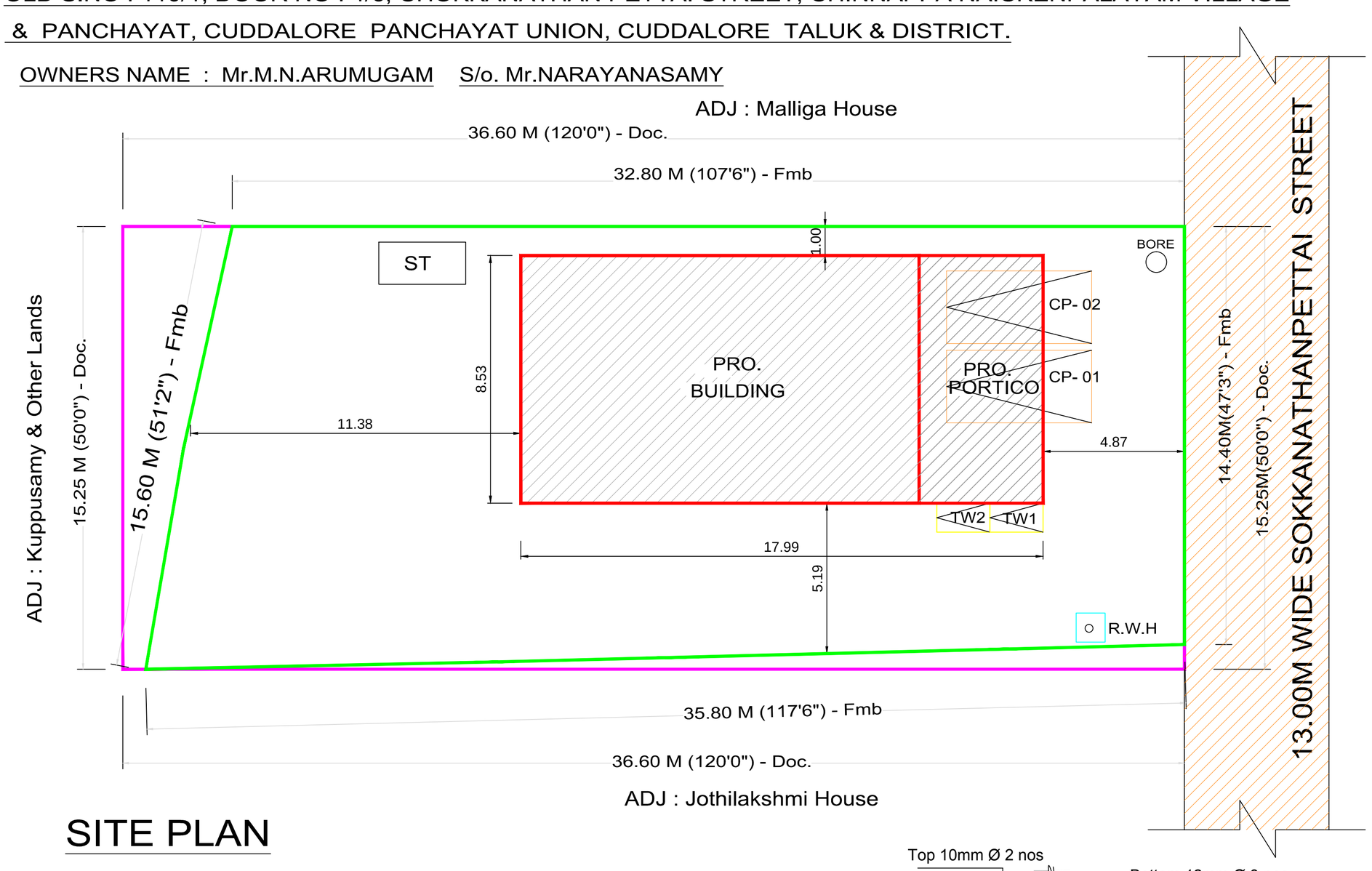


## SITE PLAN




ELEVATION




SECTION ON AA

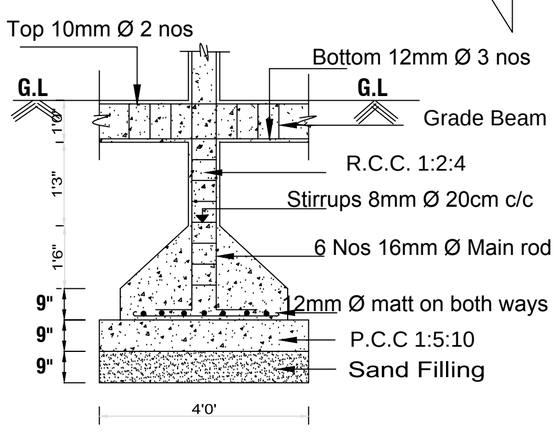


## FOUNDATION DETAILS

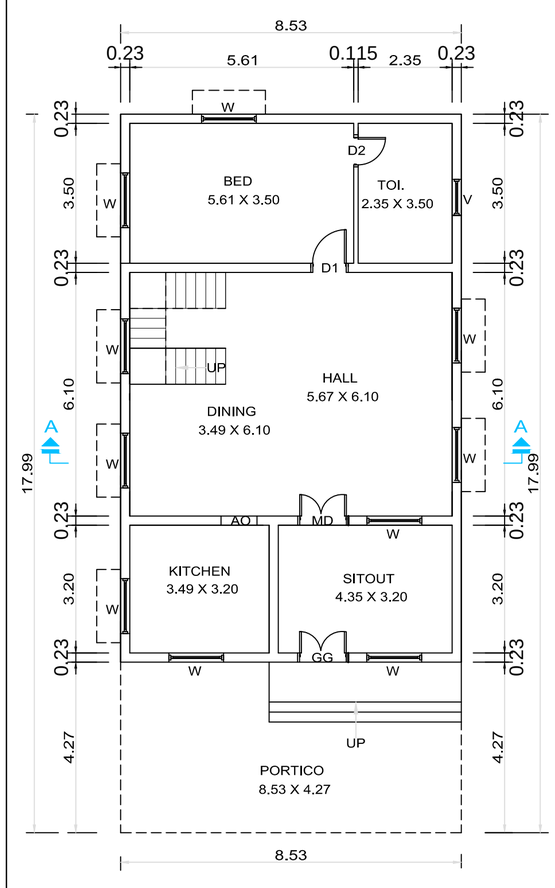


GROUND FLOOR PLAN

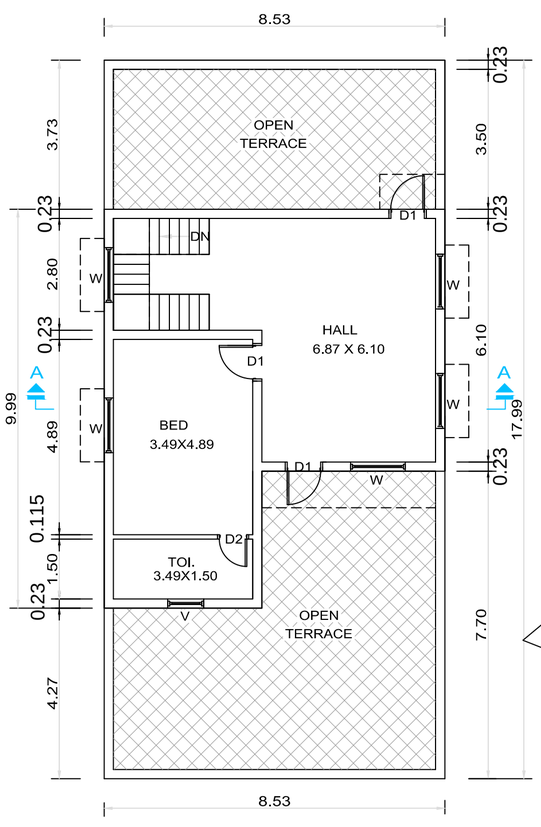


FIRST FLOOR PLAN

COLOUR DETAILS

BOUNDARY
DOCUMENT -
FMB -
PROPOSED -
ROAD -

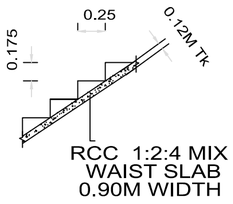


RCC 1:2:4 MIX WAIST SLAB 0.90M WIDTH

STAIRCASE DETAILS

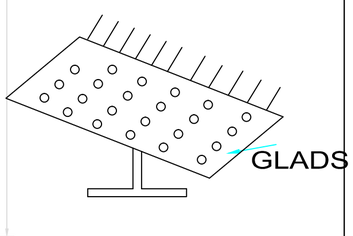

GLADS

SOLAR SYSTEM

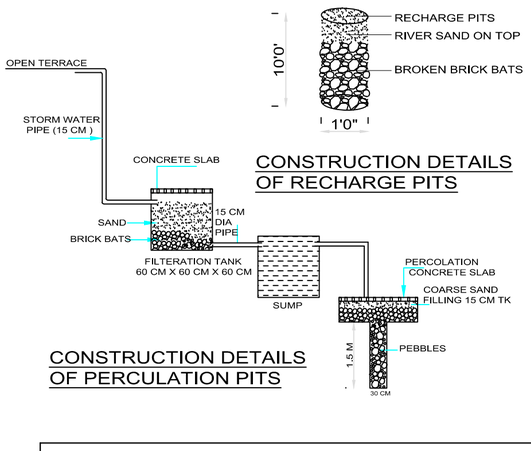


CONSTRUCTION DETAILS OF RECHARGE PITS

CONSTRUCTION DETAILS OF PERCULATION PITS

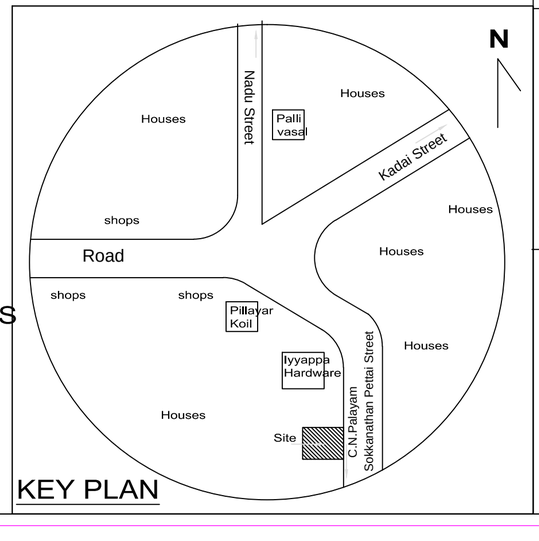


KEY PLAN

SEPTIC TANK DETAILS

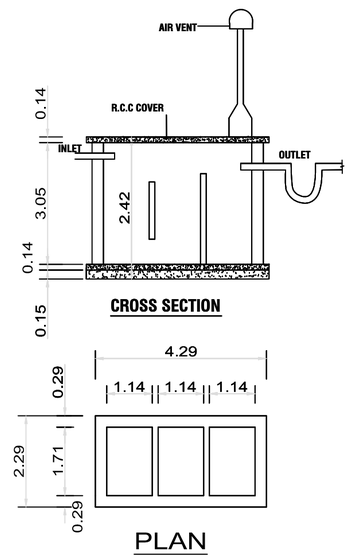


| AREA DETAILS | SQ.FT | SQ.M |
|---|---|---|
| TOTAL AREA OF SITE | | |
| AS PER DOCUMENT | 6000.00 | 558.00 |
| AS PER PATTA | 5543.50 | 515.00 |
| PRO.GROUND FLOOR | 1652.30 | 153.50 |
| PRO.FIRST FLOOR | 748.10 | 69.50 |
| TOTAL BUILT UP AREA | 2400.40 | 223.00 |
| TOTAL FSI AREA | 2400.40 | 223.00 |
| NON FSI AREA | - | - |
| OPEN AREA | 3891.20 | 361.50 |
| FSI - 2400.40 / 5543.50 = 0.433 | | |
| CAR PARKING - ( 2.50 X 5.00M ) — 2 NOS | | |
| TWO WHEELER PARKING (1.0 X 1.80M ) — 2 NOS | | |

| REFERENCE | | FEET | M |
|---|---|---|---|
| MD | MAIN DOOR | 3'6" X 7'0" | 1.06 X 2.10 |
| D1 | DOOR | 3'0" X 7'0" | 0.90 X 2.10 |
| D2 | DOOR | 2'6" X 7'0" | 0.75 X 2.10 |
| W | WINDOW | 5'0" X 5'0" | 1.50 X 1.50 |
| W1 | WINDOW | 3'0" X 5'0" | 0.90 X 1.50 |
| V | VENTILATOR | 3'0" X 2'0" | 0.90 X 0.60 |

## NOTE

1. TO BE PROVIDE RWHS RULE NO 35(5) AND 63(1)
2. EVERY KITCHEN SHALL BE PROVIDED ONE TWO WHEELER PARKING AND EVERY 75 SQ.M SHALL BE ONE CAR PARKING (1 CAR PARKING SIZE -2.50 X 5.0M)
3. WATER STORAGE TANK SHALL BE MAINTAINED IN A PERFECT MOSQUITO PROOF CONDITION
4. ROOM SHALL HAVE FOR THE ADMISSION OF LIGHT & AIR ONE OR MORE OPENING
5. ALL WASTE WATER SHOULD BE USED AT THE GARDEN
6. FAN POINTS TO BE PROVIDED AT LIVING ROOMS
7. SOLAR WATER HEATER IS PROVIDED IN TERRACE FLOOR
8. "u" TRAP TO BE PROVIDED OUTERSIDE THE SEPTIC TANK

OWNER'S SIGN


Er.R.MURUGAMANI,
B.Tech.,M.sc.,(REV).,AIV.,AMIE.,CE(1).,
Chartered Civil Engineer & Approved Valuer,
Reg.Engineer Grade:III (93/LS/2019/00005)
Cuddalore City Municipal Corporation,
6/9,First Floor,Fund Office Building,
Bharathi Road,Cuddalore - 607 001.
Cell : 9442657332, Ph : 04142 - 221596

THE LANDLENS SUITE

# Eight ways to know a piece of land before you pay for it.

This report covers one part of the picture. These cover the rest, drawn from the same government records, for any property in Tamil Nadu.

### LandLens One
Ask anything about a property and get an answer grounded in live government records, with the sources shown.
**/landlens/one**

### Verify My Land
Every record check run on one property and returned as a single report.
**/landlens/verify-my-land**

### Legal Opinion
An advocate's written opinion on the title, built on the records we pull for it.
**/landlens**

### One Map
Every layer on one map: the parcel, its boundary, zoning, water bodies and what sits around it.
**/landlens/one/map**

### PriceMap
What land actually changed hands for around this plot, taken from the registered deeds.
**/landlens/pricemap**

### Build Scope
What you are allowed to build here: floor space, height, coverage and setbacks.
**/landlens/build-scope**

### Property Tracker
Watch a property and hear about it when something new is registered against it.
**/landlens/property-tracker**

### Deal Room
Run the transaction in one place: documents, stamping, signatures and the parties.
**/landlens/deal-room**

FREE TOOLS · NO ACCOUNT NEEDED

# Twenty-four checks you can run yourself, at no cost.

## Records and verification

The registers themselves, read for you.

- Encumbrance Certificate
- Patta and Chitta
- Field Measurement Sketch
- EC Analyzer
- Bank charge check
- Court case search
- Seller background check
- Approval check by survey

## Value and duty

What it is worth and what it costs to register.

- Guideline value by street
- Guideline value by survey
- Stamp duty and registration fees
- Capital gains
- Floor space index
- Area unit converter

## Zoning and land use

What the plan says can happen on this land.

- Land use zone finder
- CMDA land use check
- Coastal regulation zone
- Master plan check
- Water bodies finder
- Airport height clearance

## Registers and directories

Who holds it, and which office keeps the record.

- Find your registering office
- Temple property check
- Waqf property check
- RERA register

**Every free tool**
/tools

**Services we run for you**
/services

**The LandLens suite**
/landlens/one

Verified RealEstate™

# Every claim in this document traces back to a government record.

- Legal opinions, due diligence and title verification
- Building plan, layout and sub-division approvals
- Completion and occupancy certificates, regularisation
- Escrow, negotiation and NRI property management
- Land survey, soil testing, architecture and construction

**Verified RealEstate**
3/350/2 Mettukuppam,
OMR Thoraipakkam,
Chennai 600 097, India
**hello@verified.realestate**
+91 9996 12 9996

Prepared from the registers named on the page each finding sits on. Where a register could not be read, this document says so in its place rather than leaving the gap to be read as a clean result.