PP APPROVAL RECORD

Planning Permission

Dindigul district, Tamil Nadu

APPROVAL TYPE
Building Plan

ISSUING AUTHORITY
Rural Panchayat

The approval as the planning authority issued it, reproduced in full behind this page.

An approval speaks to what was sanctioned, not to what was built. Completion is a separate record.

PLAN SHOWING THE PROPOSED CONSTRUCTION OF R.C.C ROOF GROUND FLOOR COMMERCIAL & RESIDENTIAL BUILDING IN NEW S.F.No. 403/15 , PATTA NO. 9132 , AT TEACHER COLONY , PLOT NO 14 PART , JAMBULIYAMPATTY VILLAGE , BALAKRISHNAPURAM PANCHAYAT, DINDIGUL EAST TALUK, DINDIGUL DISTRICT.

APPLICANT : Mr. G.MAHALINGAM S/O Mr. GNANASEKAR

All dimensions are in Metre & Scale -1:100

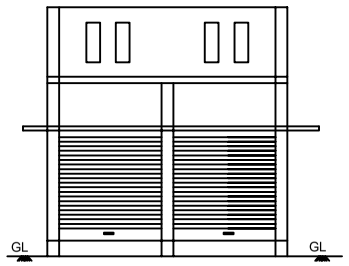

ELEVATION

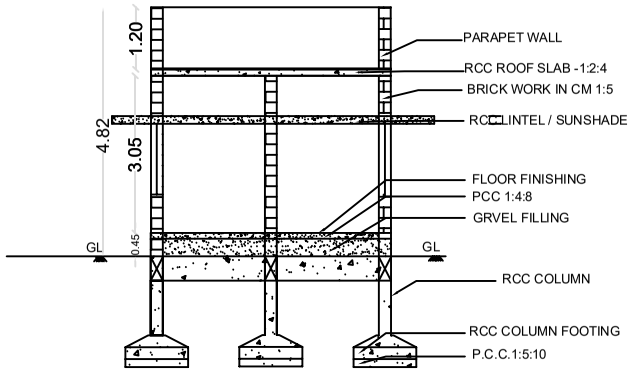

SECTION AA

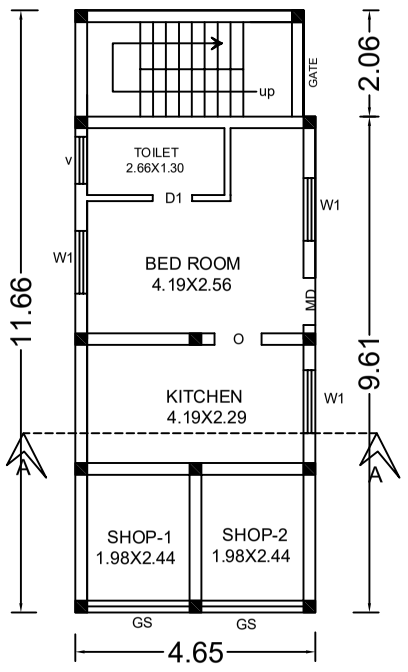

GROUND FLOOR

SITE PLAN

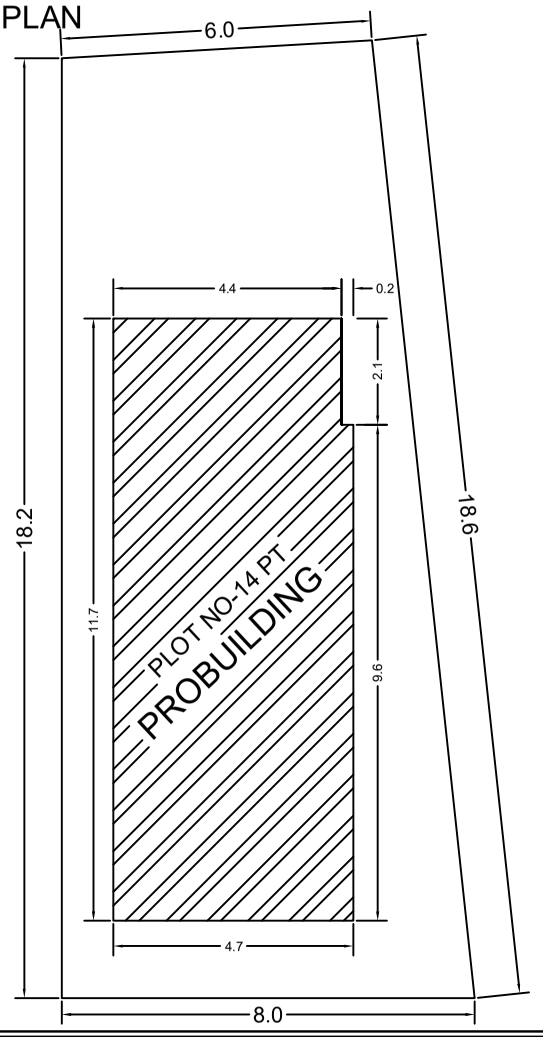

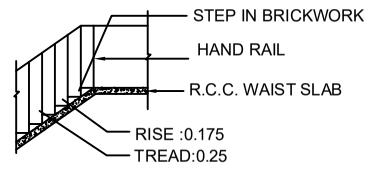

STAIR DETAILS

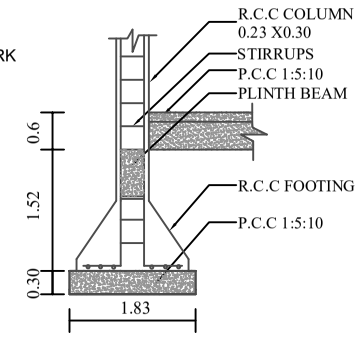

COLUMN DETAILS

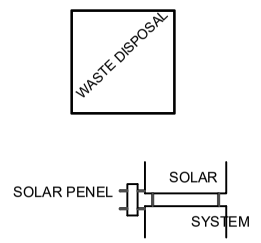

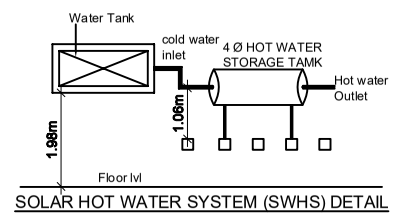

SOLAR HOT WATER SYSTEM (SWHS) DETAIL

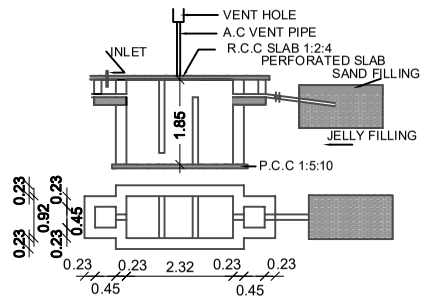

SEPTIC TANK DETAILS

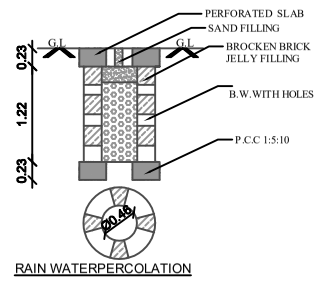

RAIN WATERPERCOLATION

KEY PLAN

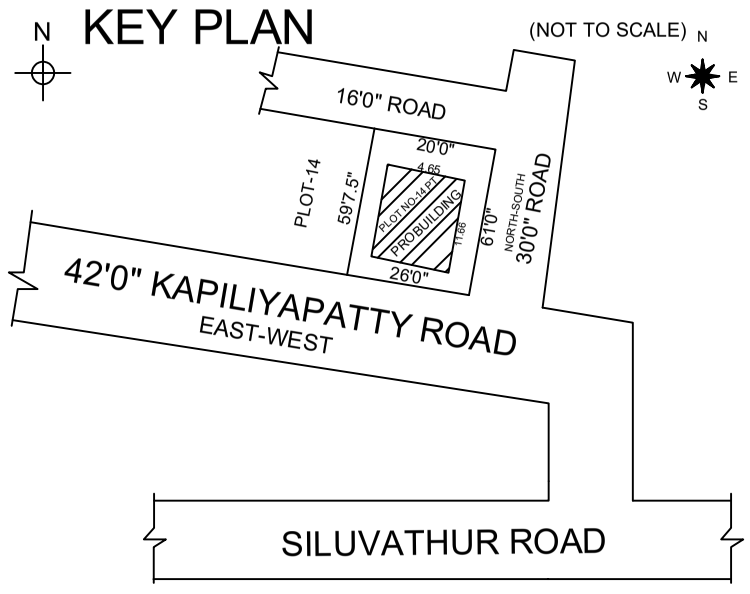

TAMIL NADU COMBINED DEVELOPMENT & BUILDING RULES, 2019

Building ht	Road wide	Plot Width	Details		Required	Available
4.82 MT	12.8mt	Below 9.00 mt	35E(i)	Front set back	1.50	1.50
			35E(ii)	Side set back		
				Side 1	1.00	1.15
				Side 2	1.00	1.00
			35E(iii)	Rear set back	0.00	5.10

JOINERIES

REFERENCE	MT	FT
D-DOOR	1.00 X 2.13	3'3" X 7'0"
D1-DOOR	0.76 X 2.13	2'6" X 7'0"
O-OPENING	1.00 X 2.13	3'3" X 7'0"
W-WINDOW	1.22 X 1.37	4'0" X 4'6"
MD-MAINDOOR	1.06 X 2.13	3'6" X 7'0"
V-VENTILATOR	0.76 X 0.46	2'6" X 1'6"

COLOURS	AREA DETAILS	SQ.MT	SQ.FT
	SITE AREA	128.86	1387.00
	GROUND FLOOR AREA	53.76	578.66
	OPEN SPACE	75.10	808.34

FLOOR SPACE INDEX

F.S.I. = FLOOR AREA / SITE AREA

F.S.I. = 53.76 / 128.86

F.S.I. =0.4

PARKING CALCULATION

50 SQ.MT = NIL
50 SQ.MT -75 SQ.MT = 1 TWO WHEELER
75 SQ.MT -100 SQ.MT = 1 CAR SPACE FOR 2 DWELLINGS & 1 TWO WHEELER FOR EACH DWELLINGS

TWO WHEELER PARKING = 1 NOS
FOUR WHEELER PARKING = 1 NOS

APPROVED DETAILS:-

ONLINE APPLICATION NO: SWP/BPA/181577/2024

ROC NO: 007/2024-2025/BP

BUILDING PLAN PERMISSION NO: 007/2024-2025/BP

APPLICANT:-

G.mahalingam

ENGINEER:-

Er.K.TAMIL SELVAN M.E(Structural)., RE GRADE-III, 078/LS/2024/00008 Municipal Corporation TAMIL BUILDERS- Airport Nagar, Dindigul-624 306, Ph : 89738 58261

ER.K.TAMIL SELVAN ME STRUCTURAL.,
TAMIL BUILDERS CALL-8973858261

THE LANDLENS SUITE

Eight ways to know a piece of land before you pay for it.

This report covers one part of the picture. These cover the rest, drawn from the same government records, for any property in Tamil Nadu.

LandLens One
Ask anything about a property and get an answer grounded in live government records, with the sources shown.
/landlens/one

Verify My Land
Every record check run on one property and returned as a single report.
/landlens/verify-my-land

Legal Opinion
An advocate's written opinion on the title, built on the records we pull for it.
/landlens

One Map
Every layer on one map: the parcel, its boundary, zoning, water bodies and what sits around it.
/landlens/one/map

PriceMap
What land actually changed hands for around this plot, taken from the registered deeds.
/landlens/pricemap

Build Scope
What you are allowed to build here: floor space, height, coverage and setbacks.
/landlens/build-scope

Property Tracker
Watch a property and hear about it when something new is registered against it.
/landlens/property-tracker

Deal Room
Run the transaction in one place: documents, stamping, signatures and the parties.
/landlens/deal-room

hello@verified.realestate · +91 9996 12 9996

FREE TOOLS · NO ACCOUNT NEEDED

Twenty-four checks you can run yourself, at no cost.

Records and verification

The registers themselves, read for you.

- Encumbrance Certificate
- Patta and Chitta
- Field Measurement Sketch
- EC Analyzer
- Bank charge check
- Court case search
- Seller background check
- Approval check by survey

Value and duty

What it is worth and what it costs to register.

- Guideline value by street
- Guideline value by survey
- Stamp duty and registration fees
- Capital gains
- Floor space index
- Area unit converter

Zoning and land use

What the plan says can happen on this land.

- Land use zone finder
- CMDA land use check
- Coastal regulation zone
- Master plan check
- Water bodies finder
- Airport height clearance

Registers and directories

Who holds it, and which office keeps the record.

- Find your registering office
- Temple property check
- Waqf property check
- RERA register

Every free tool
/tools

Services we run for you
/services

The LandLens suite
/landlens/one

Verified RealEstate™

Every claim in this document traces back to a government record.

- Legal opinions, due diligence and title verification
- Building plan, layout and sub-division approvals
- Completion and occupancy certificates, regularisation
- Escrow, negotiation and NRI property management
- Land survey, soil testing, architecture and construction

Verified RealEstate
3/350/2 Mettukuppam,
OMR Thoraipakkam,
Chennai 600 097, India
hello@verified.realestate
+91 9996 12 9996

Prepared from the registers named on the page each finding sits on. Where a register could not be read, this document says so in its place rather than leaving the gap to be read as a clean result.