PLAN INFO
PLOT_AREA_M2=163.46
AS_PER_DOCUMENT =163.46
FMB_OR_PLR =163.25
AS_AT_SITE =163.25
SINGLE_FAMILY_BLDG=YES
CRZ=NO
SECURITY_ZONE=NO
ACCESS_WIDTH_M=5.00
WHETHER_GOVT_OR_AIDED_SCHOOL=NO
ROAD_WIDTH=6.10
ROAD_LENGTH=30.00
AVG_PLOT_DEPTH= 5
AVG_PLOT_WIDTH= 10.36
LAND_USE_ZONE = RESIDENTIAL
PLOT_NO=0
SURVEY_NO= 1628/6B1
PATTA_NO=2793
DISTRICT=ERODE
TALUK = ANTHIYUR
RWH_DECLARED=YES
IS_SWIMMING_POOL_EXISTS=NO
AREA_TYPE=OTHERS
BUILDING_NEAR_TO_RIVER=NO
BUILDING_NEAR_MONUMENT=NO
BUILDING_NEAR_GOVT_BLDG=NO
IF_HERITAGE_TOWN_LESSTHAN_1KM_RADIUS=NO
PROVISION_FOR_GREEN_BUILDINGS_AND_SUSTAINABILITY=YES
FIRE_PROTECTION_AND_FIRE_SAFETY_REQUIREMENTS=YES
NOC_FOR_CONSTRUCTION_NEAR_MONUMENT=NO
JURISDICTION_TYPE= PACHAMPALAYAM VILLAGE PANCHAYAT
ORGANIZATION_TYPE= PRIVATE
OSR_APPLICABLE = NO
OSR_BUYBACK =NO
OSR_SURR_BUYBACK_RETAIN =NO
PREMIUM_FSI_REQUIRED = NO
IS_APPROVED_LAYOUT =NO

PLAN SHOWING THE PROPOSED CONSTRUCTION OF A R.C.C ROOF GROUND FLOOR BUILDING FOR RESIDENTIAL PURPOSE IN R.S.F.NO:344/1, (OLD S.F NO: 333-A), NEW SUB DIVISION R.S.F.NO: 344/1B, PATTA NO:17363, AT GANAPATHY KATTUR, PACHAMPALAYAM VILLAGE AND PANCHAYAT, ANTHIYUR UNION AND TALUK, ERODE DISTRICT.

(LAYOUT REGULARATION NO: SPFW NO: 19960/2018)

APPLICANT:

Tmt. P.RAJESWARI,
W/O .PURUSOTHAMMAN.

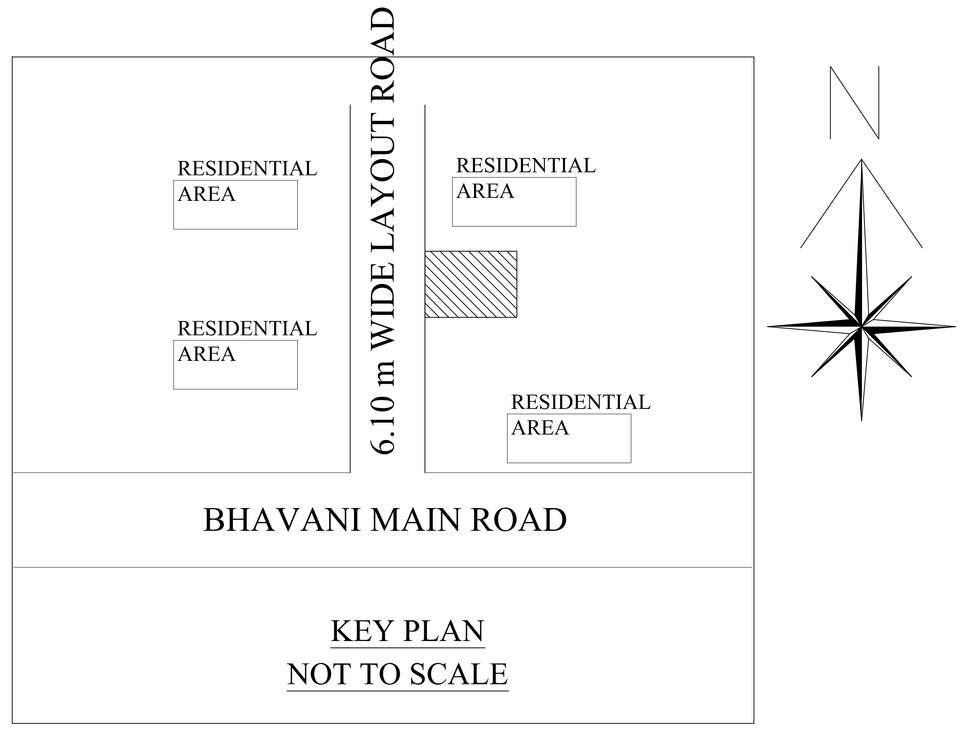

KEY PLAN
NOT TO SCALE

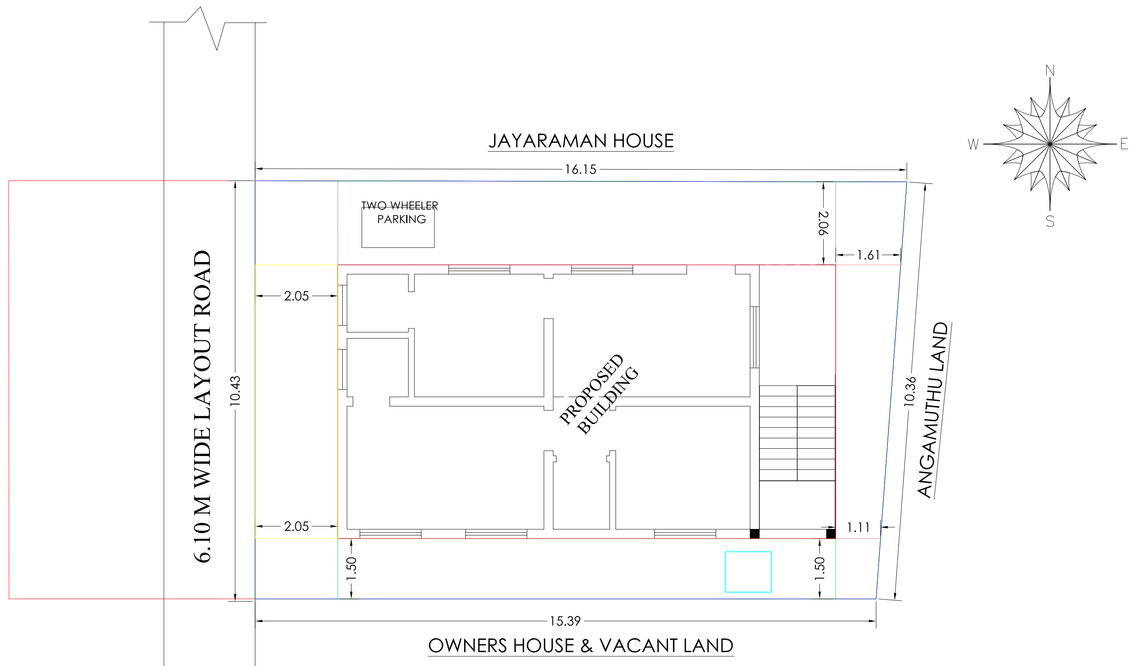

SITE PLAN
SCALE 1:100

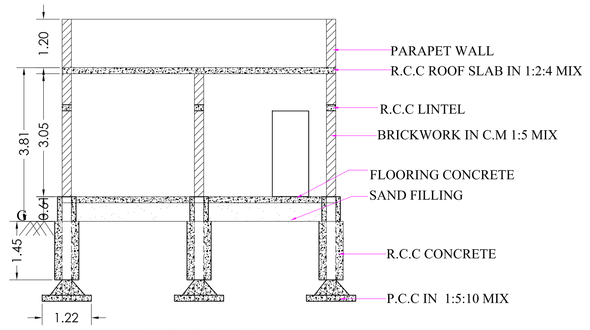

"SECTION AA"

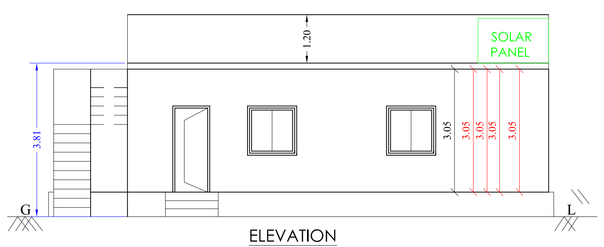

ELEVATION

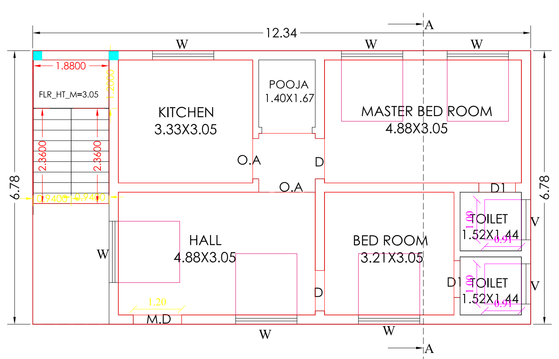

GROUND FLOOR PLAN
SCALE 1:100

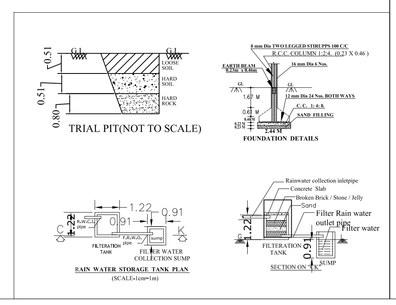

Pro. SEPTIC TANK - 1No
Pro. RAIN WATER TANK - 1No

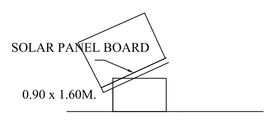

CROSS SECTION OF
SOLAR WATER HEATING SYSTEM

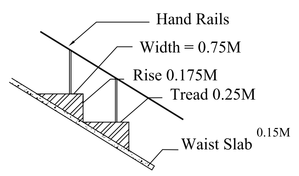

STAIRCASE DETAILS

DETAILS OF JOINARIES.

D	-	DOOR	-	5'0" X 7'0"
D1	-	DOOR	-	3'0" X 7'0"
O	-	OPEN	-	2'6" X 7'0"
W	-	WINDOW	-	6'0" X 4'0"
W1	-	WINDOW	-	4'0" X 4'0"
V	-	VENTILATOR	-	3'0" X 2'0"

NOTES:
ALL DIMENSIONS ARE IN METER.
PLAN, SECTION & ELEVATION SCALE - 1:100,
SITE PLAN SCALE - 1:100

- APPLICANT BOUNDARY
- PROPOSED BUILDING
- EXISTING ROAD

AREA DETAILS	SQ.FT	SQ.MT
APPLICANT SITE AS PER DOCUMENT	1759.50	163.46
AS AT SITE	1757.22	163.25
AREA OF R.C.C ROOF BUILDING PLINTH IN G.F	901.04	83.71
OPEN SPACE	859.32	79.80
SEPTIC TANK & SOAK PIT EACH - 1 NO		
RAIN WATER HARVESTING SUMP -- 1 NO --		

"ALL DIMINSION ARE IN FEET AND METRE "

"""SAVE RAIN WATER"

APPLICANT	ENGINEER
	Er. K. MADESHWARAN, D.C.E., Licence Building Surveyor, JAI MARUTHI PLANNERS, 3/2, Teacher's Colony, Anthiyur-638 501. Cell : 94889 72123