Verified RealEstate™

REFERENCE
4/2026-2027

ISSUED
09 July 2026

PP APPROVAL RECORD

Planning Permission

Erode district, Tamil Nadu

APPROVAL TYPE
Building Plan

ISSUING AUTHORITY
Rural Panchayat

The approval as the planning authority issued it, reproduced in full behind this page.

An approval speaks to what was sanctioned, not to what was built. Completion is a separate record.

Verified RealEstate™
3/350/2 Mettukuppam,
OMR Thoraipakkam,
Chennai 600 097, India

hello@verified.realestate
+91 9996 12 9996
verified.realestate

DIGITALLY VERIFIED RECORD

PLAN SHOWING THE PROPOSED CONSTRUCTION OF R.C.C ROOF GROUND FLOOR BUILDING FOR COMMERCIAL PURPOSE IN S.F.NO: 13/5, PATTA NO: 98, AT THALAKULAM, VARADHANALLUR VILLAGE, VARADHANALLUR PANCHAYAT, BHAVANI PANCHAYAT UNION, BHAVANI TALUK, ERODE DISTRICT.

APPLICANT: S.N. BALAKRISHNAN, S/O. NACHIMUTHUKGOUNDER.

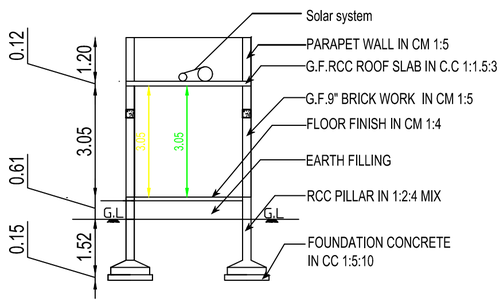

SECTION -AA

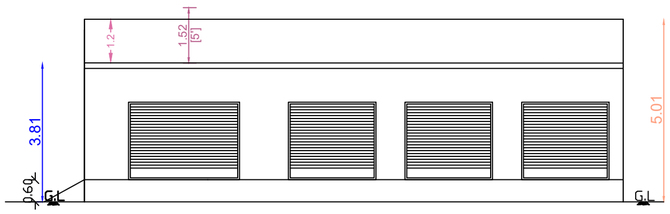

ELEVATION

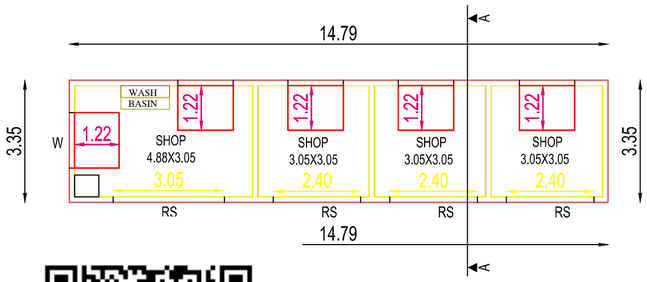

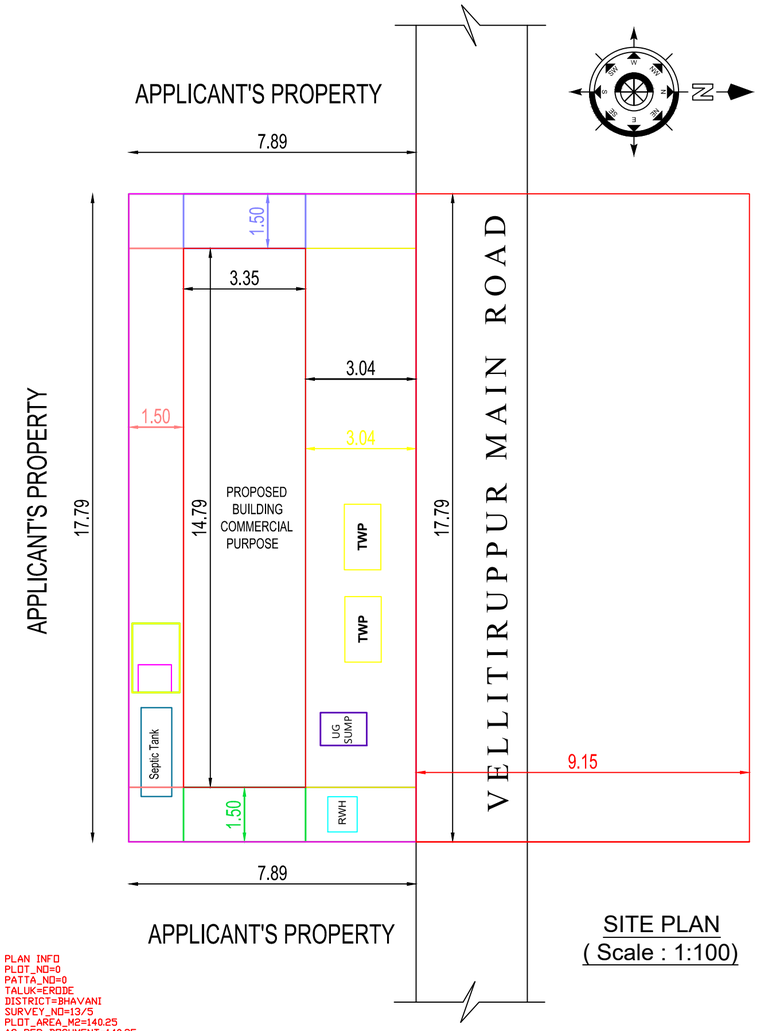

SITE PLAN
(Scale : 1:100)

AREA DETAILS	SQ.FT	SQ.MT
APPLICANT SITE AREA AS ON DOCUMENT	38.25 Cent	
TAKEN BY AREA FOR CONSTRUCTION	1509.09	140.25
APPLICANT SITE AREA AS ON SUPER IMPOSED PLOT BOUNDARY	1509.09	140.25
PLINTH AREA OF PROPOSED R.C.C ROOF COMMERCIAL BUILDING	532.94	49.53
CARPET AREA IN PROPOSED COMMERCIAL BUILDING	460.42	42.79
OPEN SPACE AREA	976.15	90.70
PRO. SEPTIC TANK & SOAK PIT - EACH	1 NO	
PRO. STAIR CASE	1 NO	
PRO. RAIN WATER HARVESTING SUMP	1 NO	

JOINERY DETAILS	FEET	METRE	JOINERY DETAILS	FEET	METRE
D - DOOR	4'0" X 7'0"	1.22 X 2.13	V - VENTILATOR	2'6" X 4'0"	0.76 X 1.22
D1 - DOOR	2'6" X 7'0"	0.76 X 2.13	V1 - VENTILATOR	2'6" X 2'6"	0.76 X 0.76
W - WINDOW	4'0" X 4'0"	1.22 X 1.22	RS - ROLLING SHUTTER	8'0" X 7'0"	2.43 X 2.13

Er.S.Naveen, DCE.,

SRI ANGALAPARAMESWARI
CONSTRUCTION
ENGINEER & CONTRACTOR

OFFICE: 933, LOGANATHAM HOSPITAL OPPO SIDE,
BHAVANI-638 102 (TAMIL NADU)

naveenkumarsiva1111@gmail.com Pho: +91-6379811639


```
PLAN INFO
PLOT_NO=0
PATTA_NO=0
TALUK=ERODE
DISTRICT=BHAVANI
SURVEY_NO=13/5
PLOT_AREA_M2=140.25
AS_PER_DOCUMENT=140.25
AS_AT_SITE=140.25
FMB_DR_PLR=140.25
JURISDICTION_TYPE= PANCHAYAT
SINGLE_FAMILY_BLDG=YES
BLOCK_1_B-SHOP_MEMBER_COUNT=1
LAND_USE_ZONE =COMMERCIAL
CRZ=NO
SECURITY_ZONE=NO
WHETHER_GOVT_OR_AIDED_SCHOOL=NO
ROAD_WIDTH=9.15
ROAD_LENGTH=200
AVG_PLOT_DEPTH=7.89
AVG_PLOT_WIDTH=17.79
RWH_DECLARED=YES
BUILDING_NEAR_TO_RIVER=NO
DSR_APPLICABLE =NO
DSR_SURRENDER_OR_BUYBACK=BUYBACK
PREMIUM_FSI_REQUIRED=NO
IS_APPROVED_LAYOUT=NO
AREA_TYPE=OTHERS
BUILDING_NEAR_MONUMENT=NO
BUILDING_NEAR_GOVT_BLDG=NO
IS_SWIMMING_POOL_EXISTS=NO
IF_HERITAGE_TOWN_LESSTHAN_1KM_RADIUS=NO
```

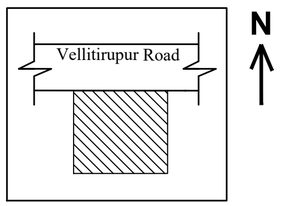

KEY PLAN

R PLAN
00)

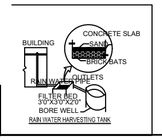

SEPTIC TANK & SOAK PIT DETAILS

APPLICANT

ENGINEER

Er.S.NAVEEN,DCE.,
Civil Engineer & L.B.S.,
Sri Angalaparameshwari Construction
933,Loganathan Hospital opposite
BHAVANI-638 301
Cell:63798 11639

THE LANDLENS SUITE

Eight ways to know a piece of land before you pay for it.

This report covers one part of the picture. These cover the rest, drawn from the same government records, for any property in Tamil Nadu.

LandLens One
Ask anything about a property and get an answer grounded in live government records, with the sources shown.
/landlens/one

Verify My Land
Every record check run on one property and returned as a single report.
/landlens/verify-my-land

Legal Opinion
An advocate's written opinion on the title, built on the records we pull for it.
/landlens

One Map
Every layer on one map: the parcel, its boundary, zoning, water bodies and what sits around it.
/landlens/one/map

PriceMap
What land actually changed hands for around this plot, taken from the registered deeds.
/landlens/pricemap

Build Scope
What you are allowed to build here: floor space, height, coverage and setbacks.
/landlens/build-scope

Property Tracker
Watch a property and hear about it when something new is registered against it.
/landlens/property-tracker

Deal Room
Run the transaction in one place: documents, stamping, signatures and the parties.
/landlens/deal-room

hello@verified.realestate · +91 9996 12 9996

FREE TOOLS · NO ACCOUNT NEEDED

Twenty-four checks you can run yourself, at no cost.

Records and verification

The registers themselves, read for you.

- Encumbrance Certificate
- Patta and Chitta
- Field Measurement Sketch
- EC Analyzer
- Bank charge check
- Court case search
- Seller background check
- Approval check by survey

Value and duty

What it is worth and what it costs to register.

- Guideline value by street
- Guideline value by survey
- Stamp duty and registration fees
- Capital gains
- Floor space index
- Area unit converter

Zoning and land use

What the plan says can happen on this land.

- Land use zone finder
- CMDA land use check
- Coastal regulation zone
- Master plan check
- Water bodies finder
- Airport height clearance

Registers and directories

Who holds it, and which office keeps the record.

- Find your registering office
- Temple property check
- Waqf property check
- RERA register

Every free tool
/tools

Services we run for you
/services

The LandLens suite
/landlens/one

Verified RealEstate™

Every claim in this document traces back to a government record.

- Legal opinions, due diligence and title verification
- Building plan, layout and sub-division approvals
- Completion and occupancy certificates, regularisation
- Escrow, negotiation and NRI property management
- Land survey, soil testing, architecture and construction

Verified RealEstate
3/350/2 Mettukuppam,
OMR Thoraipakkam,
Chennai 600 097, India
hello@verified.realestate
+91 9996 12 9996

Prepared from the registers named on the page each finding sits on. Where a register could not be read, this document says so in its place rather than leaving the gap to be read as a clean result.