Verified RealEstate™

REFERENCE
SWP/BPA/466426/2025

ISSUED
20 December 2025

PP APPROVAL RECORD

Planning Permission

Kallakurichi

Kallakurichi district, Tamil Nadu

APPROVAL TYPE
Building Plan

ISSUING AUTHORITY
DTCP

The approval as the planning authority issued it, reproduced in full behind this page.

An approval speaks to what was sanctioned, not to what was built. Completion is a separate record.

Verified RealEstate™
3/350/2 Mettukuppam,
OMR Thoraipakkam,
Chennai 600 097, India

hello@verified.realestate
+91 9996 12 9996
verified.realestate

DIGITALLY VERIFIED RECORD

B.P/DTCP.No: 650/2025

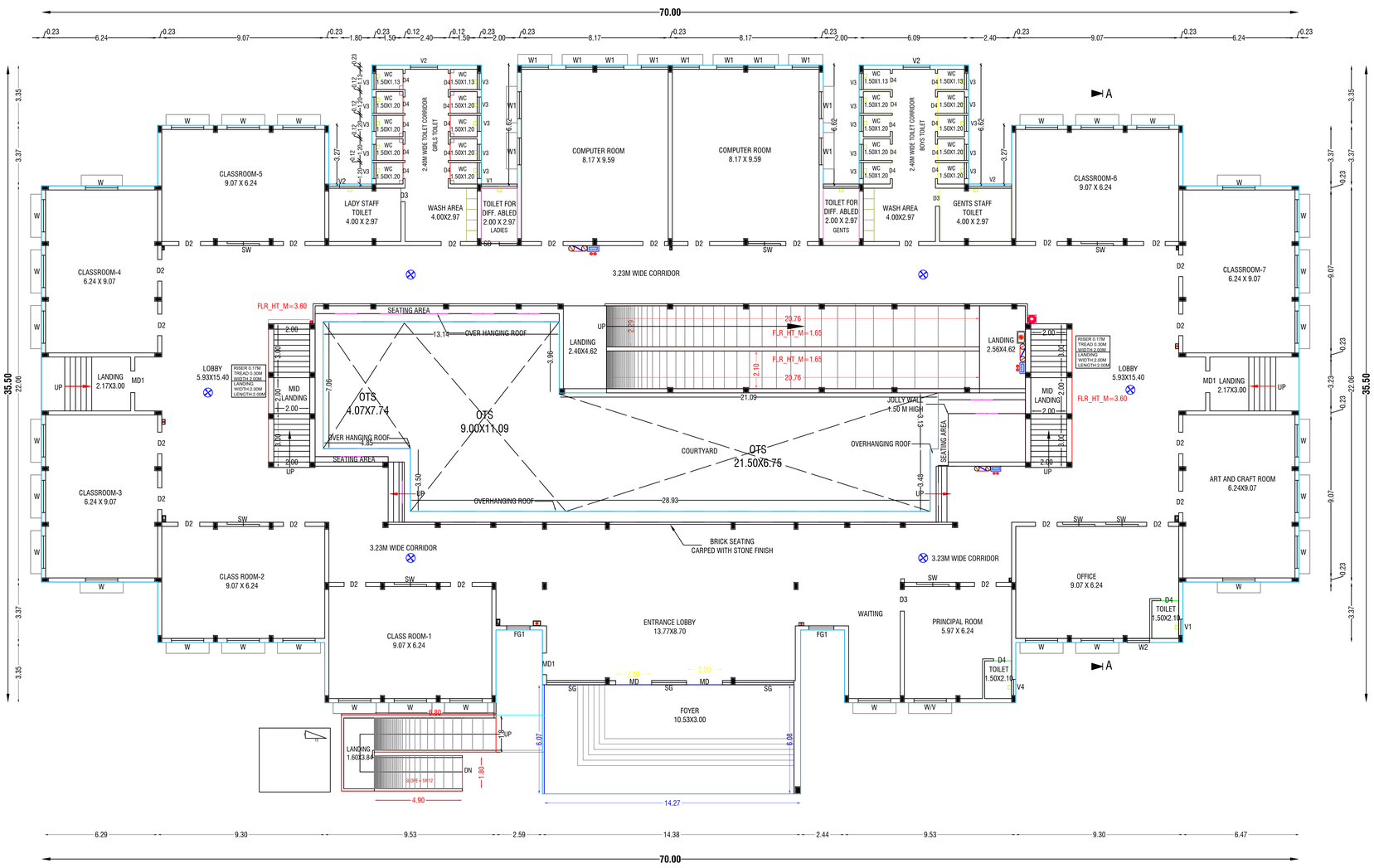

BLOCK-1-SCHOOL-GROUND FLOOR PLAN

N

ALL DIMENSIONS ARE IN METER

Scale:- 1 : 100

Sheet No : 6/20

BLOCK 1- SCHOOL-GROUND FLOOR PLAN

DETAILED PLAN SHOWING THE PROPOSED R.C.C. ROOFED CONSTRUCTION OF THE EDUCATIONAL BUILDING IN S.F.NO:82/1 OF VADAPOONDI & 197/2B & 2D OF NAGALOOR VILLAGE, KALLAKURICHI TALUK , KALLAKURICHI DISTRICT.

APPLICANT :THE HEADMASTER (GOVERNMENT HIGHER SECONDARY SCHOOL)

AREA STATEMENT

VILLAGE	SF.No.	AREA AS PER ORDER COPY IN Sq.M.	IN SFT.	IN HEC.
VADAPOONDI	82/1	19800.00	213125.40	1.98.00
NAGALOOR	197/2B	807.00	8686.47	0.08.07
	197/2D	850.00	9149.32	0.08.50
	TOTAL	21457.00	2230961.19	2.14.57
AS PER FMB		21222.47		

JOINERY DETAILS

SYM	DESCRIPTION	IN METER
M.D	STEEL FRAMED TOUGHNED GLASS DOORS	2.00 X 2.40
D1	STEEL FRAMED DOOR WITH STEEL SHUTTERS WITH PARTLY GLAZED AND MDF SHUTTER DOORS	1.50 X 2.10
D2	STEEL FRAMED DOOR WITH MDF SHUTTER	1.20 X 2.10
D3	STEEL FRAMED DOOR WITH MDF SHUTTER	1.00 X 2.10
D4	ABS DOOR	1.00 X 2.10
W	UPVC FRAMED WINDOWS WITH SHUTTERS	1.80 X 1.50
W1	UPVC FRAMED WINDOWS WITH SHUTTERS	1.50 X 1.50
W2	UPVC FRAMED WINDOWS WITH SHUTTERS	1.20 X 1.50
SW	UPVC FRAMED WINDOWS WITH SHUTTERS (SLIDING)	1.80 X 1.50
SD	SLIDING SHUTTER ABS DOOR	1.00 X 2.10
V	STEEL FRAMED GLAZED VENTILATOR WITH M.S. GRILLE	2.40 X 0.75
V1	STEEL FRAMED GLAZED VENTILATOR WITH M.S. GRILLE	2.00 X 0.75
V2	STEEL FRAMED GLAZED VENTILATOR WITH M.S. GRILLE	1.50 X 0.75
V3	STEEL FRAMED GLAZED VENTILATOR WITH M.S. GRILLE	0.90 X 0.75
FG1	FIXED GLAZING	1.20 X 2.75
FG2	FIXED GLAZING	1.20 X 6.05
J	CONCRETE JOLLY	1.50 X 1.30

LEGEND

Block Name	Floor Name	Floor Area in Sq.m	Deduction Area in Sq.m	Total FSI Area in Sq.m	Total Non-FSI Area in Sq.m	Total Built up Area in Sq.m
Block-1 Proposed (School)	Ground Floor	2172.94	259.58	1913.36	-	1913.36
	First Floor	2172.94	290.35	1882.59	-	1882.59
	Second Floor	2103.75	290.53	1813.22	-	1813.22
	Terrace Floor	-	-	-	41.54	41.54
	TOTAL	6449.63	840.46	5609.17	41.54	5650.71
Block-2 Proposed Girl's Hostel	Ground Floor	1695.38	302.08	1393.30	-	1393.30
	First Floor	1568.65	207.55	1361.10	-	1361.10
	Second Floor	1568.65	207.55	1361.10	-	1361.10
	Third Floor	1568.65	207.55	1361.10	-	1361.10
	Fourth Floor	1568.65	207.55	1361.10	-	1361.10
	Terrace Floor	-	-	-	103.94	103.94
	TOTAL	7969.98	1132.28	6837.70	103.94	6941.64
Block-3 Proposed Boy's Hostel	Ground Floor	1695.38	302.08	1393.30	-	1393.30
	First Floor	1568.65	207.55	1361.10	-	1361.10
	Second Floor	1568.65	207.55	1361.10	-	1361.10
	Third Floor	1568.65	207.55	1361.10	-	1361.10
	Fourth Floor	1568.65	207.55	1361.10	-	1361.10
	Terrace Floor	-	-	-	103.94	103.94
	TOTAL	7969.98	1132.28	6837.70	103.94	6941.64
GRAND TOTAL		22389.59	2759.10	19303.77	249.42	19533.99
FLOOR SPACE INDEX			0.909<2.00			
PLOT COVERAGE			22.14%<50%			

FIRE SAFETY EQUIPMENT

SMOKE DEDICATOR/AUTO SPRINKLER

EMERGENCY LIGHT

FIRE ALARM SWITCH

FIRE HYDRENT

FIRE ALARM

FIRE EXTINGUISHER

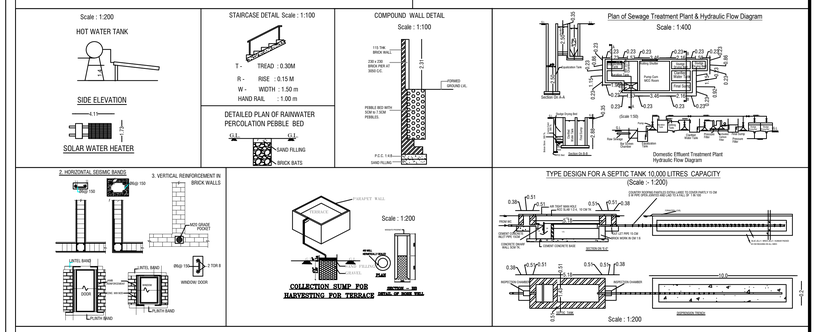

தலைமை ஆசிரியர்
கள்ளக்குறிச்சி மாவட்ட அரசு மாதிரி பள்ளி
கள்ளக்குறிச்சி - 606 202.

APPLICANT

REGISTERED STRUCTURAL ENGINEER

REGISTERED ENGINEER

B.P/DTCP.No: 650/2025

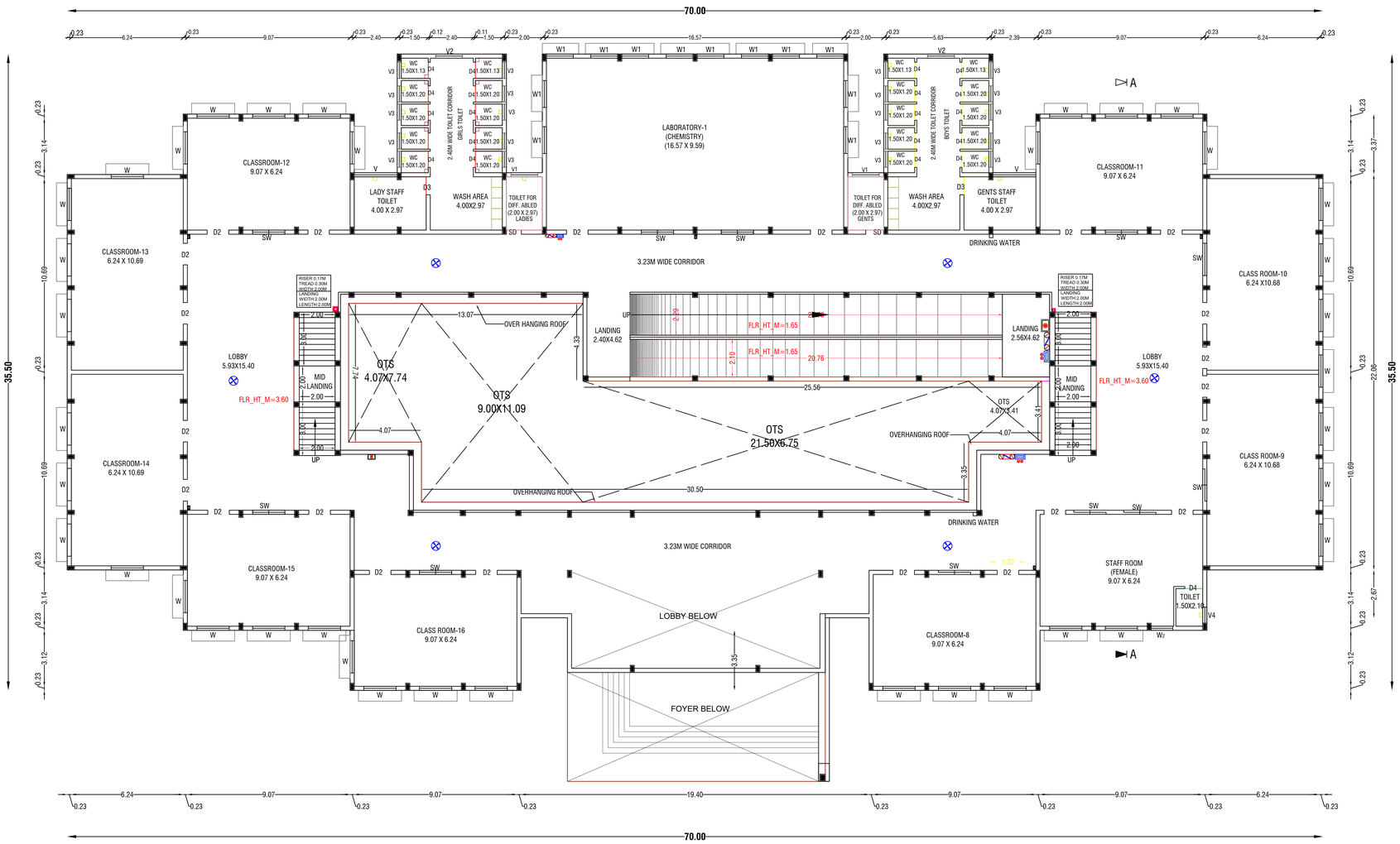

BLOCK-1-SCHOOL-FIRST FLOOR PLAN

N

ALL DIMENSIONS ARE IN METER	Scale:- 1 : 100	Sheet No : 7/20
	BLOCK 1- SCHOOL- FIRST FLOOR PLAN	

DETAILED PLAN SHOWING THE PROPOSED R.C.C. ROOFED CONSTRUCTION OF THE EDUCATIONAL BUILDING IN S.F.NO:82/1 OF VADAPOONDI & 197/2B & 2D OF NAGALOOR VILLAGE, KALLAKURICHI TALUK , KALLAKURICHI DISTRICT.

APPLICANT :THE HEADMASTER (GOVERNMENT HIGHER SECONDARY SCHOOL)

AREA STATEMENT

VILLAGE	SF.No.	AREA AS PER ORDER COPY IN Sq.M.	IN SFT.	IN HEC.
VADAPOONDI	82/1	19800.00	213125.40	1.98.00
NAGALOOR	197/2B	807.00	8686.47	0.08.07
	197/2D	850.00	9149.32	0.08.50
	TOTAL	21457.00	2230961.19	2.14.57
AS PER FMB		21222.47		

JOINERY DETAILS

SYM	DESCRIPTION	IN METER
M.D	STEEL FRAMED TOUGHNED GLASS DOORS	2.00 X 2.40
D1	STEEL FRAMED DOOR WITH STEEL SHUTTERS WITH PARTLY GLAZED AND MDF SHUTTER DOORS	1.50 X 2.10
D2	STEEL FRAMED DOOR WITH MDF SHUTTER	1.20 X 2.10
D3	STEEL FRAMED DOOR WITH MDF SHUTTER	1.00 X 2.10
D4	ABS DOOR	1.00 X 2.10
W	UPVC FRAMED WINDOWS WITH SHUTTERS	1.80 X 1.50
W1	UPVC FRAMED WINDOWS WITH SHUTTERS	1.50 X 1.50
W2	UPVC FRAMED WINDOWS WITH SHUTTERS	1.20 X 1.50
SW	UPVC FRAMED WINDOWS WITH SHUTTERS (SLIDING)	1.80 X 1.50
SD	SLIDING SHUTTER ABS DOOR	1.00 X 2.10
V	STEEL FRAMED GLAZED VENTILATOR WITH M.S. GRILLE	2.40 X 0.75
V1	STEEL FRAMED GLAZED VENTILATOR WITH M.S. GRILLE	2.00 X 0.75
V2	STEEL FRAMED GLAZED VENTILATOR WITH M.S. GRILLE	1.50 X 0.75
V3	STEEL FRAMED GLAZED VENTILATOR WITH M.S. GRILLE	0.90 X 0.75
FG1	FIXED GLAZING	1.20 X 2.75
FG2	FIXED GLAZING	1.20 X 6.05
J	CONCRETE JOLLY	1.50 X 1.30

LEGEND

Block Name	Floor Name	Floor Area in Sq.m	Deduction Area in Sq.m	Total FSI Area in Sq.m	Total Non-FSI Area in Sq.m	Total Built up Area in Sq.m
Block-1 Proposed (School)	Ground Floor	2172.94	259.58	1913.36	-	1913.36
	First Floor	2172.94	290.35	1882.59	-	1882.59
	Second Floor	2103.75	290.53	1813.22	-	1813.22
	Terrace Floor	-	-	-	41.54	41.54
	TOTAL	6449.63	840.46	5609.17	41.54	5650.71
Block-2 Proposed Girl's Hostel	Ground Floor	1695.38	302.08	1393.30	-	1393.30
	First Floor	1568.65	207.55	1361.10	-	1361.10
	Second Floor	1568.65	207.55	1361.10	-	1361.10
	Third Floor	1568.65	207.55	1361.10	-	1361.10
	Fourth Floor	1568.65	207.55	1361.10	-	1361.10
	Terrace Floor	-	-	-	103.94	103.94
	TOTAL	7969.98	1132.28	6837.70	103.94	6941.64
Block-3 Proposed Boy's Hostel	Ground Floor	1695.38	302.08	1393.30	-	1393.30
	First Floor	1568.65	207.55	1361.10	-	1361.10
	Second Floor	1568.65	207.55	1361.10	-	1361.10
	Third Floor	1568.65	207.55	1361.10	-	1361.10
	Fourth Floor	1568.65	207.55	1361.10	-	1361.10
	Terrace Floor	-	-	-	103.94	103.94
	TOTAL	7969.98	1132.28	6837.70	103.94	6941.64
GRAND TOTAL		22389.59	2759.10	19303.77	249.42	19533.99
FLOOR SPACE INDEX			0.909<2.00			
PLOT COVERAGE			22.14%<50%			

FIRE SAFETY EQUIPMENT

SMOKE DEDICATOR/AUTO SPRINKLER
EMERGENCY LIGHT
FIRE ALARM SWITCH
FIRE HYDRENT
FIRE ALARM
FIRE EXTINGUISHER

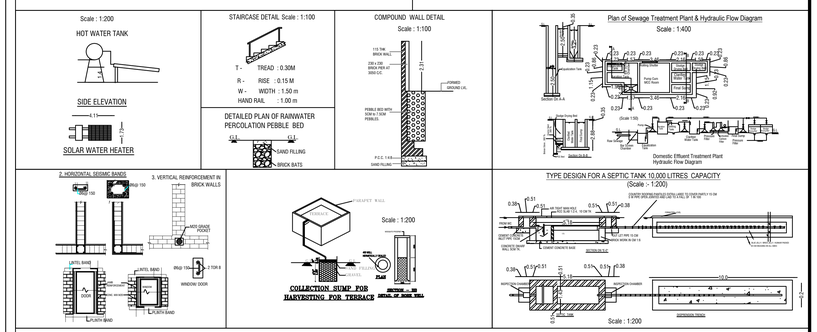

தலைமை ஆசிரியர்
கள்ளக்குறிச்சி மாவட்ட அரசு மாதிரிப் பள்ளி
கள்ளக்குறிச்சி - 606 202.

APPLICANT

27/12/24

REGISTERED STRUCTURAL ENGINEER

27/12/24

REGISTERED ENGINEER

B.P/DTCP.No: 650/2025

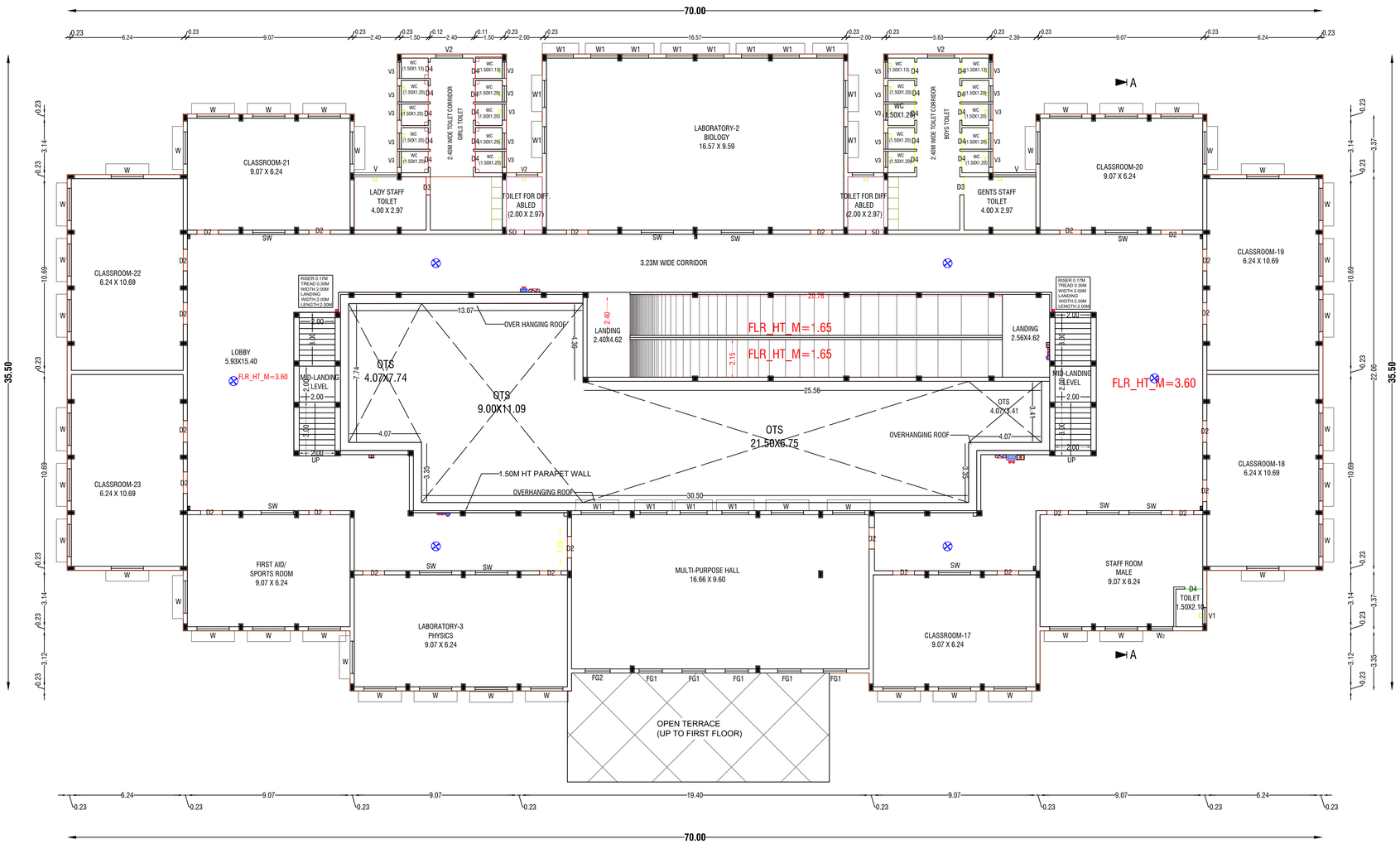

BLOCK-1-SCHOOL-SECOND FLOOR PLAN

N

ALL DIMENSIONS ARE IN METER

Scale:- 1 : 100

Sheet No : 8/20

BLOCK 1- SCHOOL- SECOND FLOOR PLAN

DETAILED PLAN SHOWING THE PROPOSED R.C.C. ROOFED CONSTRUCTION OF THE EDUCATIONAL BUILDING IN S.F.NO:82/1 OF VADAPOONDI & 197/2B & 2D OF NAGALOOR VILLAGE, KALLAKURICHI TALUK , KALLAKURICHI DISTRICT.

APPLICANT :THE HEADMASTER (GOVERNMENT HIGHER SECONDARY SCHOOL)

AREA STATEMENT

VILLAGE	SF.No.	AREA AS PER ORDER COPY IN Sq.M.	IN SFT.	IN HEC.
VADAPOONDI	82/1	19800.00	213125.40	1.98.00
NAGALOOR	197/2B	807.00	8686.47	0.08.07
	197/2D	850.00	9149.32	0.08.50
	TOTAL	21457.00	2230961.19	2.14.57
AS PER FMB		21222.47		

JOINERY DETAILS

SYM	DESCRIPTION	IN METER
M.D	STEEL FRAMED TOUGHNED GLASS DOORS	2.00 X 2.40
D1	STEEL FRAMED DOOR WITH STEEL SHUTTERS WITH PARTLY GLAZED AND MDF SHUTTER DOORS	1.50 X 2.10
D2	STEEL FRAMED DOOR WITH MDF SHUTTER	1.20 X 2.10
D3	STEEL FRAMED DOOR WITH MDF SHUTTER	1.00 X 2.10
D4	ABS DOOR	1.00 X 2.10
W	UPVC FRAMED WINDOWS WITH SHUTTERS	1.80 X 1.50
W1	UPVC FRAMED WINDOWS WITH SHUTTERS	1.50 X 1.50
W2	UPVC FRAMED WINDOWS WITH SHUTTERS	1.20 X 1.50
SW	UPVC FRAMED WINDOWS WITH SHUTTERS (SLIDING)	1.80 X 1.50
SD	SLIDING SHUTTER ABS DOOR	1.00 X 2.10
V	STEEL FRAMED GLAZED VENTILATOR WITH M.S. GRILLE	2.40 X 0.75
V1	STEEL FRAMED GLAZED VENTILATOR WITH M.S. GRILLE	2.00 X 0.75
V2	STEEL FRAMED GLAZED VENTILATOR WITH M.S. GRILLE	1.50 X 0.75
V3	STEEL FRAMED GLAZED VENTILATOR WITH M.S. GRILLE	0.90 X 0.75
FG1	FIXED GLAZING	1.20 X 2.75
FG2	FIXED GLAZING	1.20 X 6.05
J	CONCRETE JOLLY	1.50 X 1.30

LEGEND

Block Name	Floor Name	Floor Area in Sq.m	Deduction Area in Sq.m	Total FSI Area in Sq.m	Total Non-FSI Area in Sq.m	Total Built up Area in Sq.m
Block-1 Proposed (School)	Ground Floor	2172.94	259.58	1913.36	-	1913.36
	First Floor	2172.94	290.35	1882.59	-	1882.59
	Second Floor	2103.75	290.53	1813.22	-	1813.22
	Terrace Floor	-	-	-	41.54	41.54
	TOTAL	6449.63	840.46	5609.17	41.54	5650.71
Block-2 Proposed Girl's Hostel	Ground Floor	1695.38	302.08	1393.30	-	1393.30
	First Floor	1568.65	207.55	1361.10	-	1361.10
	Second Floor	1568.65	207.55	1361.10	-	1361.10
	Third Floor	1568.65	207.55	1361.10	-	1361.10
	Fourth Floor	1568.65	207.55	1361.10	-	1361.10
	Terrace Floor	-	-	-	103.94	103.94
	TOTAL	7969.98	1132.28	6837.70	103.94	6941.64
Block-3 Proposed Boy's Hostel	Ground Floor	1695.38	302.08	1393.30	-	1393.30
	First Floor	1568.65	207.55	1361.10	-	1361.10
	Second Floor	1568.65	207.55	1361.10	-	1361.10
	Third Floor	1568.65	207.55	1361.10	-	1361.10
	Fourth Floor	1568.65	207.55	1361.10	-	1361.10
	Terrace Floor	-	-	-	103.94	103.94
	TOTAL	7969.98	1132.28	6837.70	103.94	6941.64
GRAND TOTAL		22389.59	2759.10	19303.77	249.42	19533.99
FLOOR SPACE INDEX			0.909<2.00			
PLOT COVERAGE			22.14%<50%			

FIRE SAFETY EQUIPMENT

SMOKE DEDICATOR/AUTO SPRINKLER
EMERGENCY LIGHT
FIRE ALARM SWITCH
FIRE HYDRENT
FIRE ALARM
FIRE EXTINGUISHER

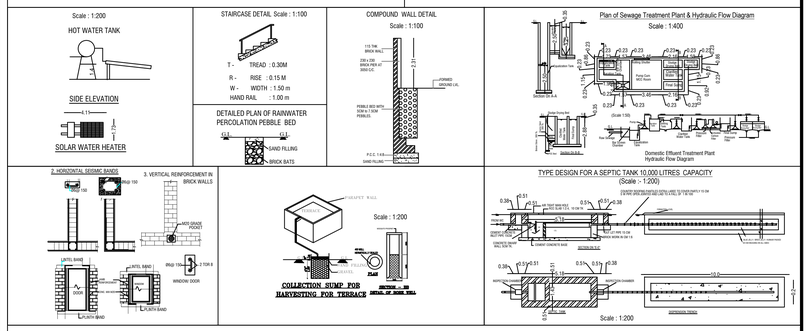

தலைமை ஆசிரியர்
கள்ளக்குறிச்சி மாவட்ட அரசு மாதிரி பள்ளி
கள்ளக்குறிச்சி - 606 202.

APPLICANT

22/12/24

REGISTERED STRUCTURAL ENGINEER

22/12/24

REGISTERED ENGINEER

B.P/DTCP.No: 650/2025

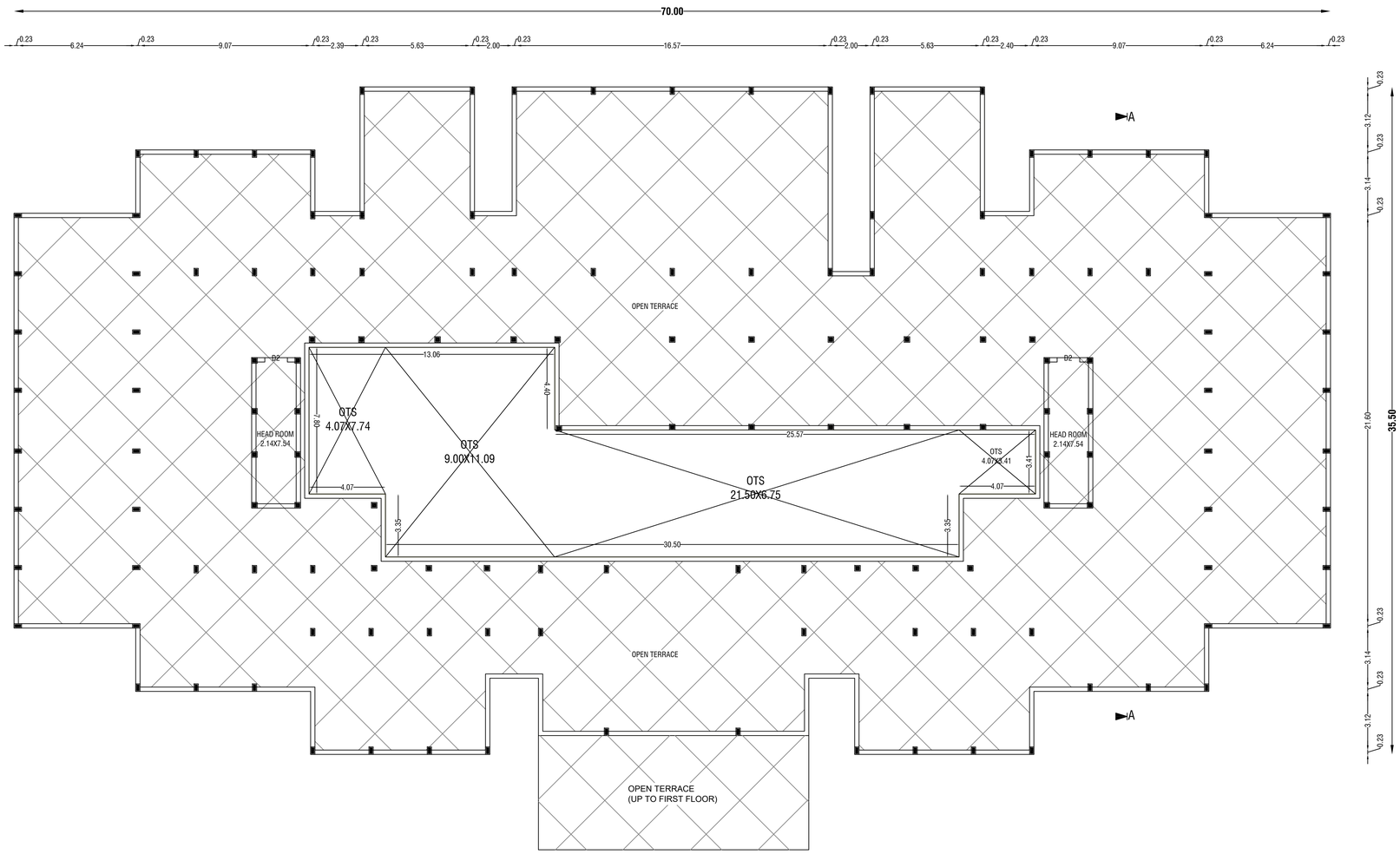

BLOCK-1-SCHOOL-TERRACE FLOOR PLAN

N

ALL DIMENSIONS ARE IN METER

Scale:- 1 : 100

Sheet No : 9/20

BLOCK 1- SCHOOL- TERRACE FLOOR PLAN

DETAILED PLAN SHOWING THE PROPOSED R.C.C. ROOFED CONSTRUCTION OF THE EDUCATIONAL BUILDING IN S.F.NO:82/1 OF VADAPOONDI & 197/2B & 2D OF NAGALOOR VILLAGE, KALLAKURICHI TALUK , KALLAKURICHI DISTRICT.

APPLICANT :THE HEADMASTER (GOVERNMENT HIGHER SECONDARY SCHOOL)

AREA STATEMENT

VILLAGE	SF.No.	AREA AS PER ORDER COPY		
		IN Sq.M.	IN SFT.	IN HEC.
VADAPOONDI	82/1	19800.00	213125.40	1.98.00
NAGALOOR	197/2B	807.00	8686.47	0.08.07
	197/2D	850.00	9149.32	0.08.50
	TOTAL	21457.00	2230961.19	2.14.57
AS PER FMB		21222.47		

JOINERY DETAILS

SYM	DESCRIPTION	IN METER
M.D	STEEL FRAMED TOUGHNED GLASS DOORS	2.00 X 2.40
D1	STEEL FRAMED DOOR WITH STEEL SHUTTERS WITH PARTLY GLAZED AND MDF SHUTTER DOORS	1.50 X 2.10
D2	STEEL FRAMED DOOR WITH MDF SHUTTER	1.20 X 2.10
D3	STEEL FRAMED DOOR WITH MDF SHUTTER	1.00 X 2.10
D4	ABS DOOR	1.00 X 2.10
W	UPVC FRAMED WINDOWS WITH SHUTTERS	1.80 X 1.50
W1	UPVC FRAMED WINDOWS WITH SHUTTERS	1.50 X 1.50
W2	UPVC FRAMED WINDOWS WITH SHUTTERS	1.20 X 1.50
SW	UPVC FRAMED WINDOWS WITH SHUTTERS (SLIDING)	1.80 X 1.50
SD	SLIDING SHUTTER ABS DOOR	1.00 X 2.10
V	STEEL FRAMED GLAZED VENTILATOR WITH M.S. GRILLE	2.40 X 0.75
V1	STEEL FRAMED GLAZED VENTILATOR WITH M.S. GRILLE	2.00 X 0.75
V2	STEEL FRAMED GLAZED VENTILATOR WITH M.S. GRILLE	1.50 X 0.75
V3	STEEL FRAMED GLAZED VENTILATOR WITH M.S. GRILLE	0.90 X 0.75
FG1	FIXED GLAZING	1.20 X 2.75
FG2	FIXED GLAZING	1.20 X 6.05
J	CONCRETE JOLLY	1.50 X 1.30

LEGEND

Block Name	Floor Name	Floor Area in Sq.m	Deduction Area in Sq.m	Total FSI Area in Sq.m	Total Non-FSI Area in Sq.m	Total Built up Area in Sq.m
Block-1 Proposed (School)	Ground Floor	2172.94	259.58	1913.36	-	1913.36
	First Floor	2172.94	290.35	1882.59	-	1882.59
	Second Floor	2103.75	290.53	1813.22	-	1813.22
	Terrace Floor	-	-	-	41.54	41.54
	TOTAL	6449.63	840.46	5609.17	41.54	5650.71
Block-2 Proposed Girl's Hostel	Ground Floor	1695.38	302.08	1393.30	-	1393.30
	First Floor	1568.65	207.55	1361.10	-	1361.10
	Second Floor	1568.65	207.55	1361.10	-	1361.10
	Third Floor	1568.65	207.55	1361.10	-	1361.10
	Fourth Floor	1568.65	207.55	1361.10	-	1361.10
	Terrace Floor	-	-	-	103.94	103.94
	TOTAL	7969.98	1132.28	6837.70	103.94	6941.64
Block-3 Proposed Boy's Hostel	Ground Floor	1695.38	302.08	1393.30	-	1393.30
	First Floor	1568.65	207.55	1361.10	-	1361.10
	Second Floor	1568.65	207.55	1361.10	-	1361.10
	Third Floor	1568.65	207.55	1361.10	-	1361.10
	Fourth Floor	1568.65	207.55	1361.10	-	1361.10
	Terrace Floor	-	-	-	103.94	103.94
	TOTAL	7969.98	1132.28	6837.70	103.94	6941.64
GRAND TOTAL		22389.59	2759.10	19303.77	249.42	19533.99
FLOOR SPACE INDEX			0.909<2.00			
PLOT COVERAGE			22.14%<50%			

FIRE SAFETY EQUIPMENT

SMOKE DEDICATOR/AUTO SPRINKLER

EMERGENCY LIGHT

FIRE ALARM SWITCH

FIRE HYDRENT

FIRE ALARM

FIRE EXTINGUISHER

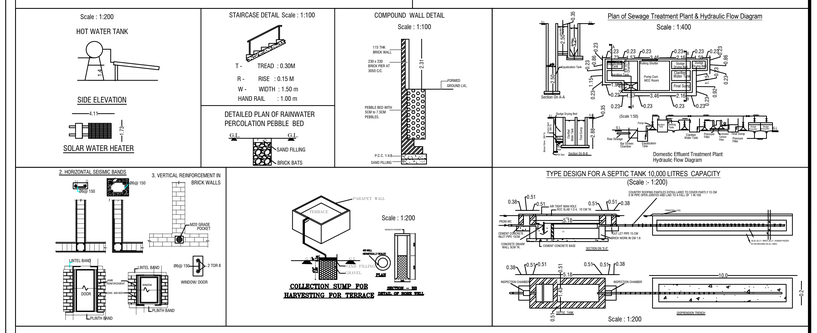

தலைமை ஆசிரியர்
கள்ளக்குறிச்சி மாவட்ட அரசு மாதிரிப் பள்ளி
கள்ளக்குறிச்சி - 606 202.

APPLICANT

22/12/24

REGISTERED STRUCTURAL ENGINEER

22/12/24

REGISTERED ENGINEER

B.P/DTCP.No: 650/2025

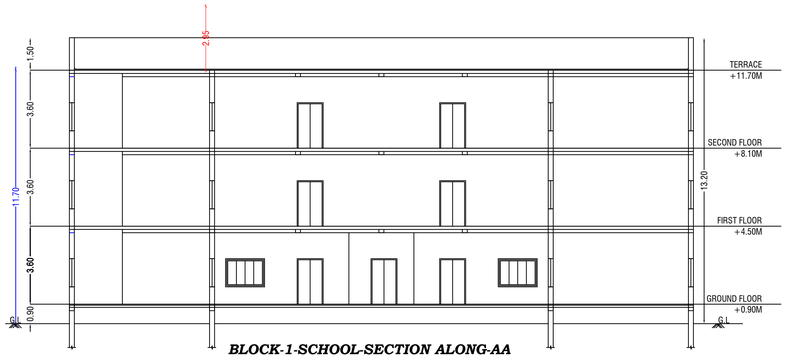

BLOCK-1-SCHOOL-SECTION ALONG-AA

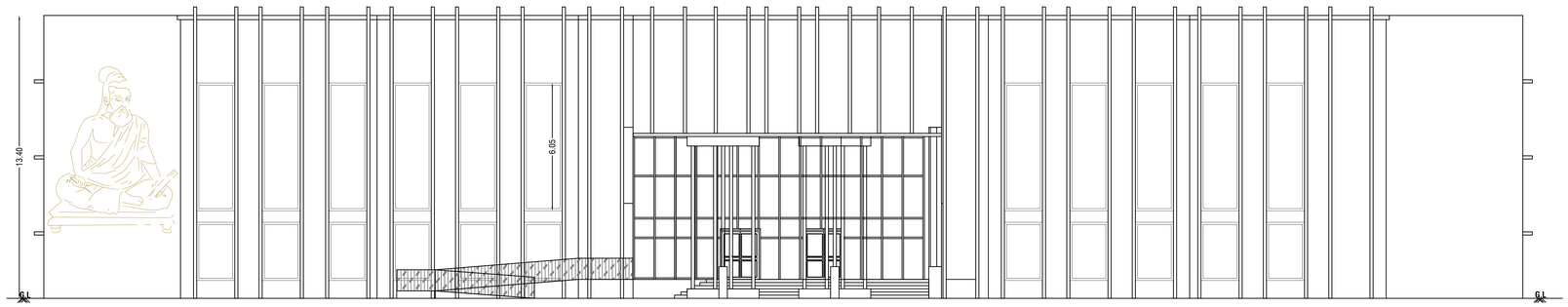

BLOCK-1-SCHOOL-ELEVATION

N

ALL DIMENSIONS ARE IN METER

Scale:- 1 : 100

Sheet No : 10/20

BLOCK 1- SCHOOL SECTION-AA & ELEVATION

DETAILED PLAN SHOWING THE PROPOSED R.C.C. ROOFED CONSTRUCTION OF THE EDUCATIONAL BUILDING IN S.F.NO:82/1 OF VADAPOONDI & 197/2B & 2D OF NAGALOOR VILLAGE, KALLAKURICHI TALUK , KALLAKURICHI DISTRICT.

APPLICANT :THE HEADMASTER (GOVERNMENT HIGHER SECONDARY SCHOOL)

AREA STATEMENT

VILLAGE	SF.No.	AREA AS PER ORDER COPY		
		IN Sq.M.	IN SFT.	IN HEC.
VADAPOONDI	82/1	19800.00	213125.40	1.98.00
NAGALOOR	197/2B	807.00	8686.47	0.08.07
	197/2D	850.00	9149.32	0.08.50
	TOTAL	21457.00	2230961.19	2.14.57
AS PER FMB		21222.47		

JOINERY DETAILS

SYM	DESCRIPTION	IN METER
M.D	STEEL FRAMED TOUGHNED GLASS DOORS	2.00 X 2.40
D1	STEEL FRAMED DOOR WITH STEEL SHUTTERS WITH PARTLY GLAZED AND MDF SHUTTER DOORS	1.50 X 2.10
D2	STEEL FRAMED DOOR WITH MDF SHUTTER	1.20 X 2.10
D3	STEEL FRAMED DOOR WITH MDF SHUTTER	1.00 X 2.10
D4	ABS DOOR	1.00 X 2.10
W	UPVC FRAMED WINDOWS WITH SHUTTERS	1.80 X 1.50
W1	UPVC FRAMED WINDOWS WITH SHUTTERS	1.50 X 1.50
W2	UPVC FRAMED WINDOWS WITH SHUTTERS	1.20 X 1.50
SW	UPVC FRAMED WINDOWS WITH SHUTTERS (SLIDING)	1.80 X 1.50
SD	SLIDING SHUTTER ABS DOOR	1.00 X 2.10
V	STEEL FRAMED GLAZED VENTILATOR WITH M.S. GRILLE	2.40 X 0.75
V1	STEEL FRAMED GLAZED VENTILATOR WITH M.S. GRILLE	2.00 X 0.75
V2	STEEL FRAMED GLAZED VENTILATOR WITH M.S. GRILLE	1.50 X 0.75
V3	STEEL FRAMED GLAZED VENTILATOR WITH M.S. GRILLE	0.90 X 0.75
FG1	FIXED GLAZING	1.20 X 2.75
FG2	FIXED GLAZING	1.20 X 6.05
J	CONCRETE JOLLY	1.50 X 1.30

LEGEND

Block Name	Floor Name	Floor Area in Sq.m	Deduction Area in Sq.m	Total FSI Area in Sq.m	Total Non-FSI Area in Sq.m	Total Built up Area in Sq.m
Block-1 Proposed (School)	Ground Floor	2172.94	259.58	1913.36	-	1913.36
	First Floor	2172.94	290.35	1882.59	-	1882.59
	Second Floor	2103.75	290.53	1813.22	-	1813.22
	Terrace Floor	-	-	-	41.54	41.54
	TOTAL	6449.63	840.46	5609.17	41.54	5650.71
Block-2 Proposed Girl's Hostel	Ground Floor	1695.38	302.08	1393.30	-	1393.30
	First Floor	1568.65	207.55	1361.10	-	1361.10
	Second Floor	1568.65	207.55	1361.10	-	1361.10
	Third Floor	1568.65	207.55	1361.10	-	1361.10
	Fourth Floor	1568.65	207.55	1361.10	-	1361.10
	Terrace Floor	-	-	-	103.94	103.94
	TOTAL	7969.98	1132.28	6837.70	103.94	6941.64
Block-3 Proposed Boy's Hostel	Ground Floor	1695.38	302.08	1393.30	-	1393.30
	First Floor	1568.65	207.55	1361.10	-	1361.10
	Second Floor	1568.65	207.55	1361.10	-	1361.10
	Third Floor	1568.65	207.55	1361.10	-	1361.10
	Fourth Floor	1568.65	207.55	1361.10	-	1361.10
	Terrace Floor	-	-	-	103.94	103.94
	TOTAL	7969.98	1132.28	6837.70	103.94	6941.64
GRAND TOTAL		22389.59	2759.10	19303.77	249.42	19533.99
FLOOR SPACE INDEX			0.909<2.00			
PLOT COVERAGE			22.14%<50%			

FIRE SAFETY EQUIPMENT

SMOKE DEDICATOR/AUTO SPRINKLER

EMERGENCY LIGHT

FIRE ALARM SWITCH

FIRE HYDRENT

FIRE ALARM

FIRE EXTINGUISHER

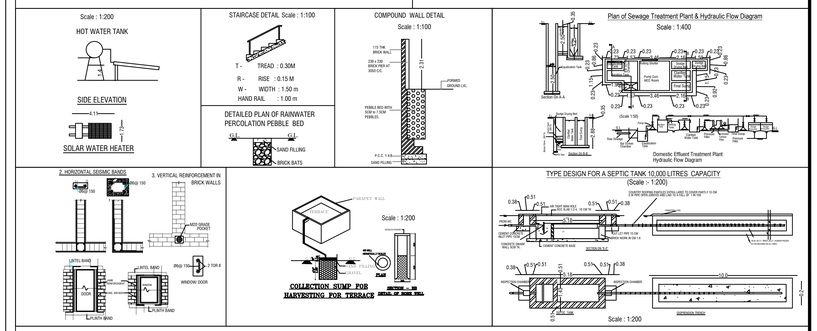

தலைமை ஆசிரியர்
கள்ளக்குறிச்சி மாவட்ட அரசு மாதிரி பள்ளி
கள்ளக்குறிச்சி - 606 202.

APPLICANT

20/12/24

REGISTERED STRUCTURAL ENGINEER

20/12/24

REGISTERED ENGINEER

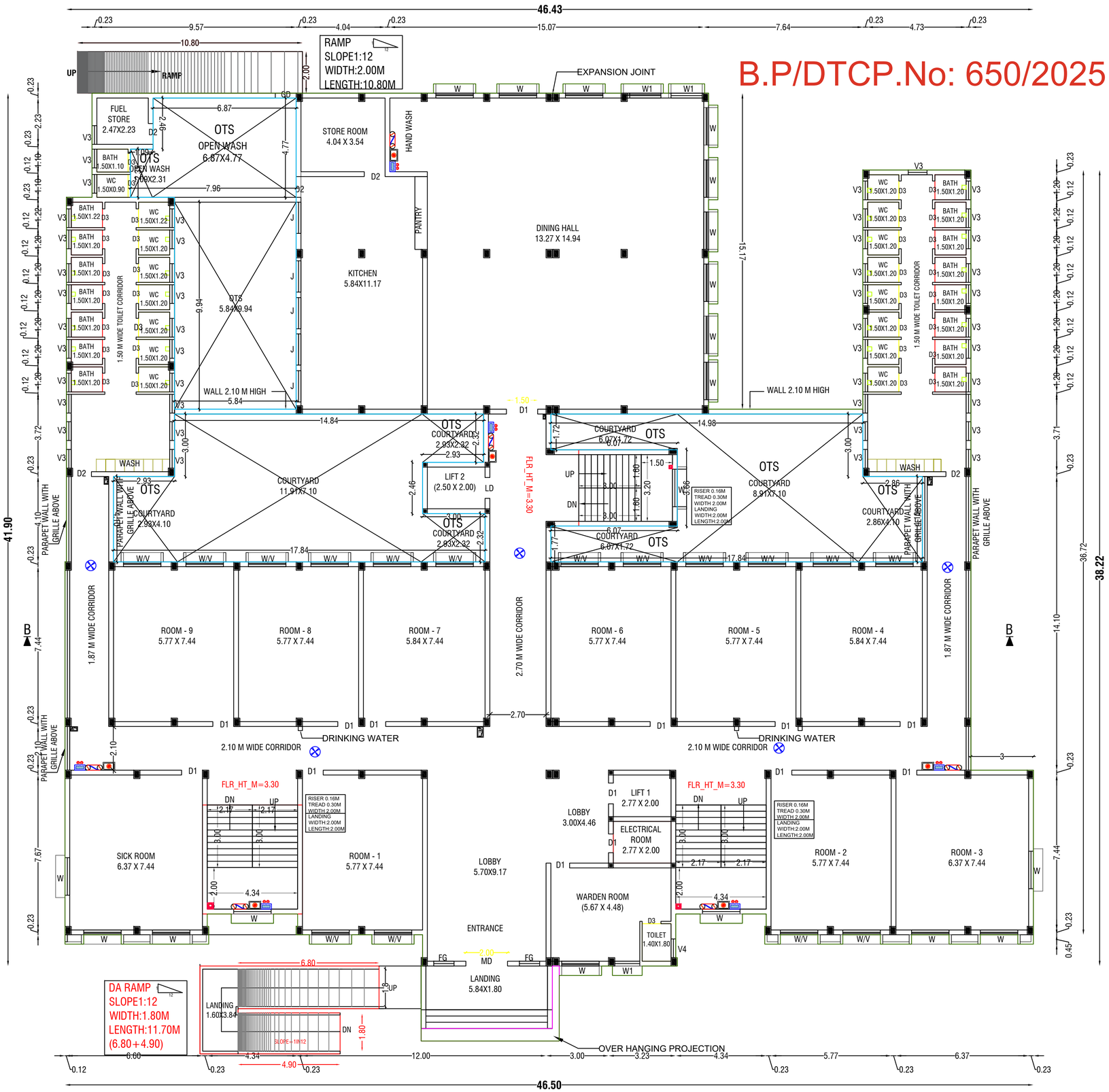

BLOCK-2-GIRL'S HOSTEL-GROUND FLOOR PLAN

N	ALL DIMENSIONS ARE IN METER	Scale:- 1 : 100	Sheet No : 11/20
		BLOCK 2- GIRL'S HOSTEL-GROUND FLOOR PLAN	

DETAILED PLAN SHOWING THE PROPOSED R.C.C. ROOFED CONSTRUCTION OF THE EDUCATIONAL BUILDING IN S.F.NO:82/1 OF VADAPOONDI & 197/2B & 2D OF NAGALOOR VILLAGE, KALLAKURICHI TALUK , KALLAKURICHI DISTRICT.

APPLICANT :THE HEADMASTER (GOVERNMENT HIGHER SECONDARY SCHOOL)

AREA STATEMENT

VILLAGE	SF.No.	AREA AS PER ORDER COPY IN Sq.M.	IN SFT.	IN HEC.
VADAPOONDI	82/1	19800.00	213125.40	1.98.00
NAGALOOR	197/2B	807.00	8686.47	0.08.07
	197/2D	850.00	9149.32	0.08.50
	TOTAL	21457.00	2230961.19	2.14.57
AS PER FMB		21222.47		

JOINERY DETAILS

SYM	DESCRIPTION	IN METER
M.D	STEEL FRAMED TOUGHNED GLASS DOORS	2.00 X 2.40
D1	STEEL FRAMED DOOR WITH STEEL SHUTTERS WITH PARTLY GLAZED AND MDF SHUTTER DOORS	1.50 X 2.10
D2	STEEL FRAMED DOOR WITH MDF SHUTTER	1.20 X 2.10
D3	STEEL FRAMED DOOR WITH MDF SHUTTER	1.00 X 2.10
D4	ABS DOOR	1.00 X 2.10
W	UPVC FRAMED WINDOWS WITH SHUTTERS	1.80 X 1.50
W1	UPVC FRAMED WINDOWS WITH SHUTTERS	1.50 X 1.50
W2	UPVC FRAMED WINDOWS WITH SHUTTERS	1.20 X 1.50
SW	UPVC FRAMED WINDOWS WITH SHUTTERS (SLIDING)	1.80 X 1.50
SD	SLIDING SHUTTER ABS DOOR	1.00 X 2.10
V	STEEL FRAMED GLAZED VENTILATOR WITH M.S. GRILLE	2.40 X 0.75
V1	STEEL FRAMED GLAZED VENTILATOR WITH M.S. GRILLE	2.00 X 0.75
V2	STEEL FRAMED GLAZED VENTILATOR WITH M.S. GRILLE	1.50 X 0.75
V3	STEEL FRAMED GLAZED VENTILATOR WITH M.S. GRILLE	0.90 X 0.75
FG1	FIXED GLAZING	1.20 X 2.75
FG2	FIXED GLAZING	1.20 X 6.05
J	CONCRETE JOLLY	1.50 X 1.30

LEGEND

Block Name	Floor Name	Floor Area in Sq.m	Deduction Area in Sq.m	Total FSI Area in Sq.m	Total Non-FSI Area in Sq.m	Total Built up Area in Sq.m
Block-1 Proposed (School)	Ground Floor	2172.94	259.58	1913.36	-	1913.36
	First Floor	2172.94	290.35	1882.59	-	1882.59
	Second Floor	2103.75	290.53	1813.22	-	1813.22
	Terrace Floor	-	-	-	41.54	41.54
	TOTAL	6449.63	840.46	5609.17	41.54	5650.71
Block-2 Proposed Girl's Hostel	Ground Floor	1695.38	302.08	1393.30	-	1393.30
	First Floor	1568.65	207.55	1361.10	-	1361.10
	Second Floor	1568.65	207.55	1361.10	-	1361.10
	Third Floor	1568.65	207.55	1361.10	-	1361.10
	Fourth Floor	1568.65	207.55	1361.10	-	1361.10
	Terrace Floor	-	-	-	103.94	103.94
	TOTAL	7969.98	1132.28	6837.70	103.94	6941.64
Block-3 Proposed Boy's Hostel	Ground Floor	1695.38	302.08	1393.30	-	1393.30
	First Floor	1568.65	207.55	1361.10	-	1361.10
	Second Floor	1568.65	207.55	1361.10	-	1361.10
	Third Floor	1568.65	207.55	1361.10	-	1361.10
	Fourth Floor	1568.65	207.55	1361.10	-	1361.10
	Terrace Floor	-	-	-	103.94	103.94
	TOTAL	7969.98	1132.28	6837.70	103.94	6941.64
GRAND TOTAL		22389.59	2759.10	19303.77	249.42	19533.99
FLOOR SPACE INDEX		0.909<2.00				
PLOT COVERAGE		22.14%<50%				

FIRE SAFETY EQUIPMENT

SMOKE DEDICATOR/AUTO SPRINKLER
EMERGENCY LIGHT
FIRE ALARM SWITCH
FIRE HYDRENT
FIRE ALARM
FIRE EXTINGUISHER

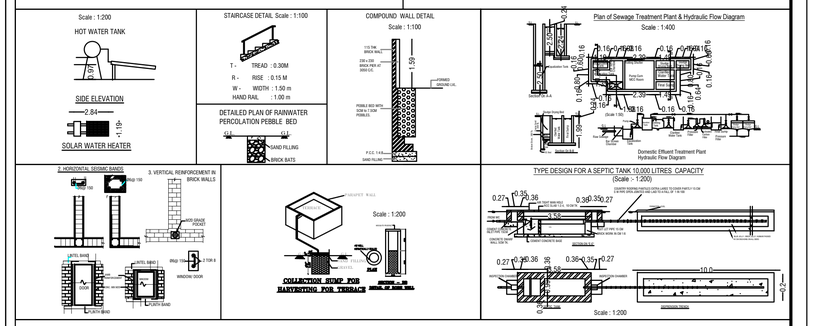

தலைமை ஆசிரியர்
கள்ளக்குறிச்சி மாவட்ட அரசு மாதிரி பள்ளி
கள்ளக்குறிச்சி - 606 202.

APPLICANT

REGISTERED STRUCTURAL ENGINEER

REGISTERED ENGINEER

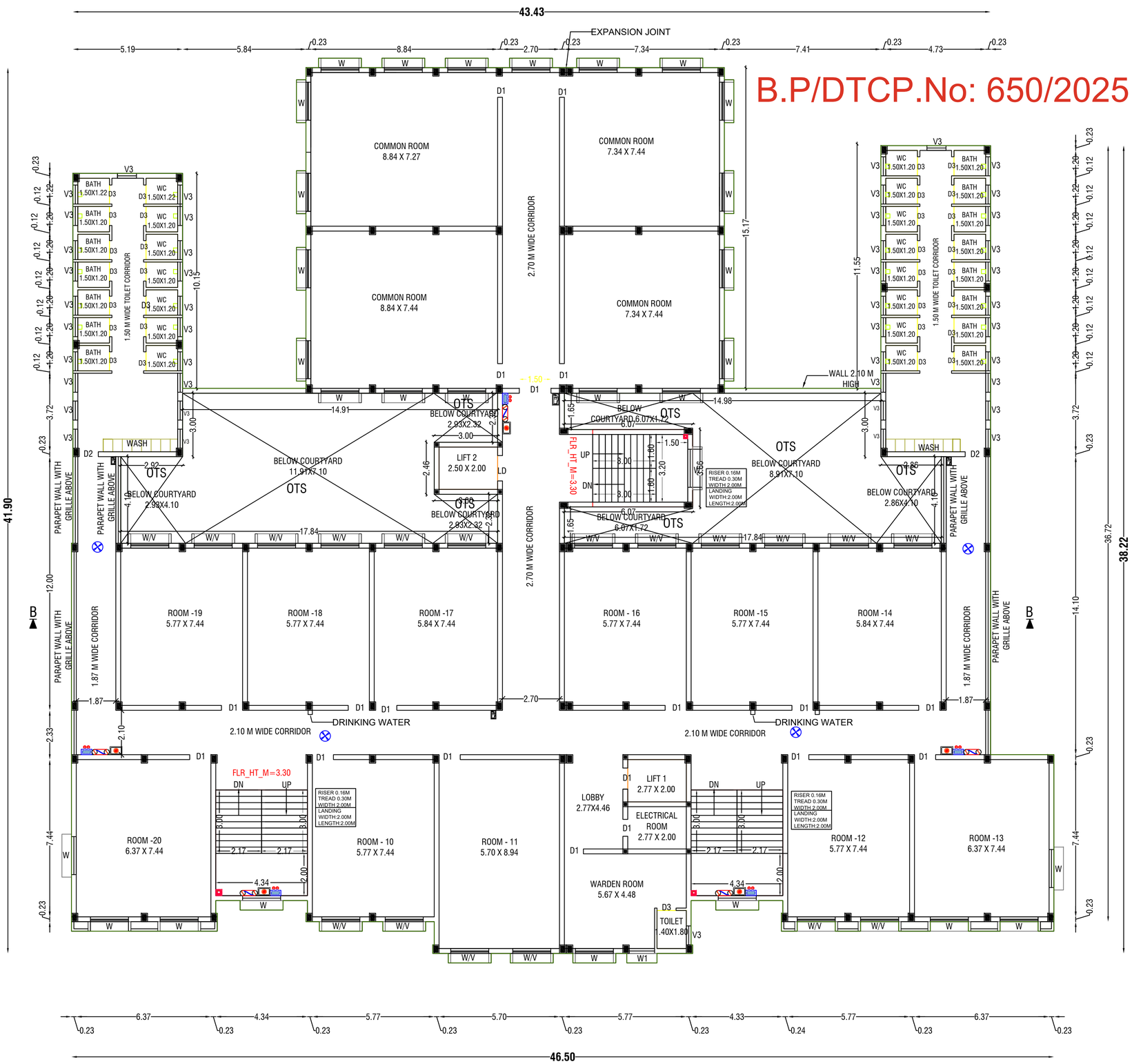

BLOCK-2-GIRL'S HOSTEL-TYPICAL FLOOR-1,2&3

N

ALL DIMENSIONS ARE IN METER

Scale:- 1 : 100 | **Sheet No : 12/20**

BLOCK 2- GIRL'S HOSTEL-TYPICAL FLOOR PLAN-1,2&3

DETAILED PLAN SHOWING THE PROPOSED R.C.C. ROOFED CONSTRUCTION OF THE EDUCATIONAL BUILDING IN S.F.NO:82/1 OF VADAPOONDI & 197/2B & 2D OF NAGALOOR VILLAGE, KALLAKURICHI TALUK , KALLAKURICHI DISTRICT.

APPLICANT :THE HEADMASTER (GOVERNMENT HIGHER SECONDARY SCHOOL)

AREA STATEMENT

VILLAGE	SF.No.	AREA AS PER ORDER COPY IN Sq.M.	IN SFT.	IN HEC.
VADAPOONDI	82/1	19800.00	213125.40	1.98.00
NAGALOOR	197/2B	807.00	8686.47	0.08.07
	197/2D	850.00	9149.32	0.08.50
	TOTAL	21457.00	2230961.19	2.14.57
AS PER FMB		21222.47		

JOINERY DETAILS

SYM	DESCRIPTION	IN METER
M.D	STEEL FRAMED TOUGHNED GLASS DOORS	2.00 X 2.40
D1	STEEL FRAMED DOOR WITH STEEL SHUTTERS WITH PARTLY GLAZED AND MDF SHUTTER DOORS	1.50 X 2.10
D2	STEEL FRAMED DOOR WITH MDF SHUTTER	1.20 X 2.10
D3	STEEL FRAMED DOOR WITH MDF SHUTTER	1.00 X 2.10
D4	ABS DOOR	1.00 X 2.10
W	UPVC FRAMED WINDOWS WITH SHUTTERS	1.80 X 1.50
W1	UPVC FRAMED WINDOWS WITH SHUTTERS	1.50 X 1.50
W2	UPVC FRAMED WINDOWS WITH SHUTTERS	1.20 X 1.50
SW	UPVC FRAMED WINDOWS WITH SHUTTERS (SLIDING)	1.80 X 1.50
SD	SLIDING SHUTTER ABS DOOR	1.00 X 2.10
V	STEEL FRAMED GLAZED VENTILATOR WITH M.S. GRILLE	2.40 X 0.75
V1	STEEL FRAMED GLAZED VENTILATOR WITH M.S. GRILLE	2.00 X 0.75
V2	STEEL FRAMED GLAZED VENTILATOR WITH M.S. GRILLE	1.50 X 0.75
V3	STEEL FRAMED GLAZED VENTILATOR WITH M.S. GRILLE	0.90 X 0.75
FG1	FIXED GLAZING	1.20 X 2.75
FG2	FIXED GLAZING	1.20 X 6.05
J	CONCRETE JOLLY	1.60X1.60

LEGEND

Block Name	Floor Name	Floor Area in Sq.m	Deduction Area in Sq.m	Total FSI Area in Sq.m	Total Non-FSI Area in Sq.m	Total Built up Area in Sq.m
Block-1 Proposed (School)	Ground Floor	2172.94	259.58	1913.36	-	1913.36
	First Floor	2172.94	290.35	1882.59	-	1882.59
	Second Floor	2103.75	290.53	1813.22	-	1813.22
	Terrace Floor	-	-	-	41.54	41.54
	TOTAL	6449.63	840.46	5609.17	41.54	5650.71
Block-2 Proposed Girl's Hostel	Ground Floor	1695.38	302.08	1393.30	-	1393.30
	First Floor	1568.65	207.55	1361.10	-	1361.10
	Second Floor	1568.65	207.55	1361.10	-	1361.10
	Third Floor	1568.65	207.55	1361.10	-	1361.10
	Fourth Floor	1568.65	207.55	1361.10	-	1361.10
	Terrace Floor	-	-	-	103.94	103.94
	TOTAL	7969.98	1132.28	6837.70	103.94	6941.64
Block-3 Proposed Boy's Hostel	Ground Floor	1695.38	302.08	1393.30	-	1393.30
	First Floor	1568.65	207.55	1361.10	-	1361.10
	Second Floor	1568.65	207.55	1361.10	-	1361.10
	Third Floor	1568.65	207.55	1361.10	-	1361.10
	Fourth Floor	1568.65	207.55	1361.10	-	1361.10
	Terrace Floor	-	-	-	103.94	103.94
	TOTAL	7969.98	1132.28	6837.70	103.94	6941.64
GRAND TOTAL		22389.59	2759.10	19303.77	249.42	19533.99

FLOOR SPACE INDEX	0.909<2.00
PLOT COVERAGE	22.14%<50%

FIRE SAFETY EQUIPMENT

- SMOKE DEDICATOR/AUTO SPRINKLER
- EMERGENCY LIGHT
- FIRE ALARM SWITCH
- FIRE HYDRENT
- FIRE ALARM
- FIRE EXTINGUISHER

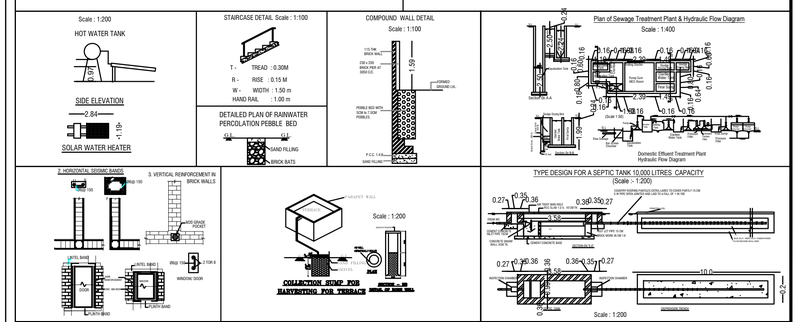

தலைமை ஆசிரியர்
கள்ளக்குறிச்சி மாவட்ட அரசு மாதிரி பள்ளி
கள்ளக்குறிச்சி - 606 202.

APPLICANT

22/12/24

REGISTERED STRUCTURAL ENGINEER

22/12/24

REGISTERED ENGINEER

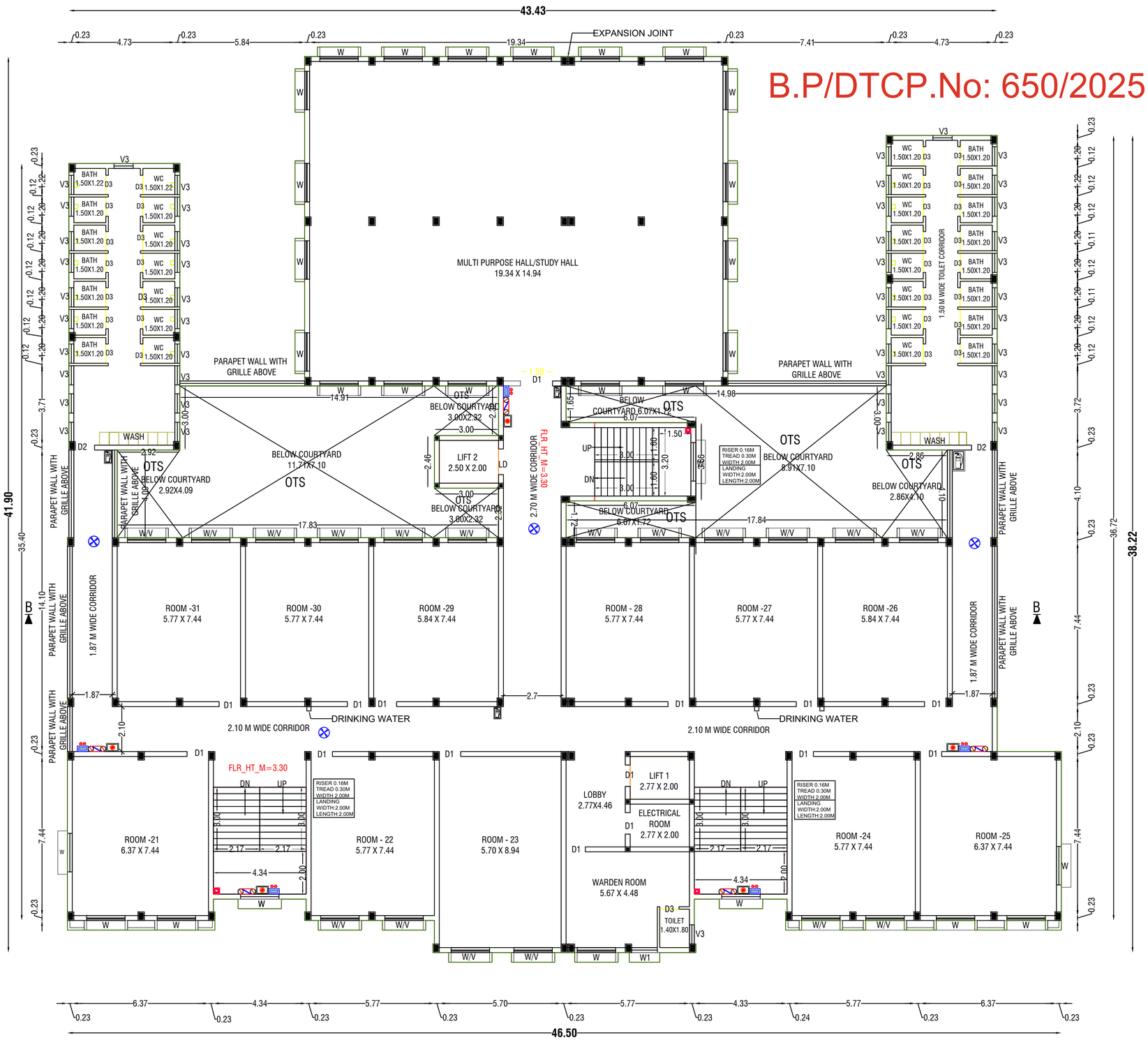

BLOCK-2-GIRL'S HOSTEL-FOURTH FLOOR

N

ALL DIMENSIONS ARE IN METER

Scale:- 1 : 100 | **Sheet No : 13/20**

BLOCK 2- GIRL'S HOSTEL-FOURTH FLOOR PLAN

DETAILED PLAN SHOWING THE PROPOSED R.C.C. ROOFED CONSTRUCTION OF THE EDUCATIONAL BUILDING IN S.F.NO:82/1 OF VADAPOONDI & 197/2B & 2D OF NAGALOOR VILLAGE, KALLAKURICHI TALUK , KALLAKURICHI DISTRICT.

APPLICANT :THE HEADMASTER (GOVERNMENT HIGHER SECONDARY SCHOOL)

AREA STATEMENT

VILLAGE	SF.No.	AREA AS PER ORDER COPY IN Sq.M.	IN SFT.	IN HEC.
VADAPOONDI	82/1	19800.00	213125.40	1.98.00
NAGALOOR	197/2B	807.00	8686.47	0.08.07
	197/2D	850.00	9149.32	0.08.50
	TOTAL	21457.00	2230961.19	2.14.57
AS PER FMB		21222.47		

JOINERY DETAILS

SYM	DESCRIPTION	IN METER
M.D	STEEL FRAMED TOUGHNED GLASS DOORS	2.00 X 2.40
D1	STEEL FRAMED DOOR WITH STEEL SHUTTERS WITH PARTLY GLAZED AND MDF SHUTTER DOORS	1.50 X 2.10
D2	STEEL FRAMED DOOR WITH MDF SHUTTER	1.20 X 2.10
D3	STEEL FRAMED DOOR WITH MDF SHUTTER	1.00 X 2.10
D4	ABS DOOR	1.00 X 2.10
W	UPVC FRAMED WINDOWS WITH SHUTTERS	1.80 X 1.50
W1	UPVC FRAMED WINDOWS WITH SHUTTERS	1.50 X 1.50
W2	UPVC FRAMED WINDOWS WITH SHUTTERS	1.20 X 1.50
SW	UPVC FRAMED WINDOWS WITH SHUTTERS (SLIDING)	1.80 X 1.50
SD	SLIDING SHUTTER ABS DOOR	1.00 X 2.10
V	STEEL FRAMED GLAZED VENTILATOR WITH M.S. GRILLE	2.40 X 0.75
V1	STEEL FRAMED GLAZED VENTILATOR WITH M.S. GRILLE	2.00 X 0.75
V2	STEEL FRAMED GLAZED VENTILATOR WITH M.S. GRILLE	1.50 X 0.75
V3	STEEL FRAMED GLAZED VENTILATOR WITH M.S. GRILLE	0.90 X 0.75
FG1	FIXED GLAZING	1.20 X 2.75
FG2	FIXED GLAZING	1.20 X 6.05
J	CONCRETE JOLLY	1.50 X 1.30

LEGEND

Block Name	Floor Name	Floor Area in Sq.m	Deduction Area in Sq.m	Total FSI Area in Sq.m	Total Non-FSI Area in Sq.m	Total Built up Area in Sq.m
Block-1 Proposed (School)	Ground Floor	2172.94	259.58	1913.36	-	1913.36
	First Floor	2172.94	290.35	1882.59	-	1882.59
	Second Floor	2103.75	290.53	1813.22	-	1813.22
	Terrace Floor	-	-	-	41.54	41.54
	TOTAL	6449.63	840.46	5609.17	41.54	5650.71
Block-2 Proposed Girl's Hostel	Ground Floor	1695.38	302.08	1393.30	-	1393.30
	First Floor	1568.65	207.55	1361.10	-	1361.10
	Second Floor	1568.65	207.55	1361.10	-	1361.10
	Third Floor	1568.65	207.55	1361.10	-	1361.10
	Fourth Floor	1568.65	207.55	1361.10	-	1361.10
	Terrace Floor	-	-	-	103.94	103.94
	TOTAL	7969.98	1132.28	6837.70	103.94	6941.64
Block-3 Proposed Boy's Hostel	Ground Floor	1695.38	302.08	1393.30	-	1393.30
	First Floor	1568.65	207.55	1361.10	-	1361.10
	Second Floor	1568.65	207.55	1361.10	-	1361.10
	Third Floor	1568.65	207.55	1361.10	-	1361.10
	Fourth Floor	1568.65	207.55	1361.10	-	1361.10
	Terrace Floor	-	-	-	103.94	103.94
	TOTAL	7969.98	1132.28	6837.70	103.94	6941.64
GRAND TOTAL		22389.59	2759.10	19303.77	249.42	19533.99

FLOOR SPACE INDEX	0.909<2.00
PLOT COVERAGE	22.14%<50%

FIRE SAFETY EQUIPMENT

SMOKE DEDICATOR/AUTO SPRINKLER	⊗	FIRE HYDRENT	
EMERGENCY LIGHT		FIRE ALARM	
FIRE ALARM SWITCH		FIRE EXTINGUISHER	

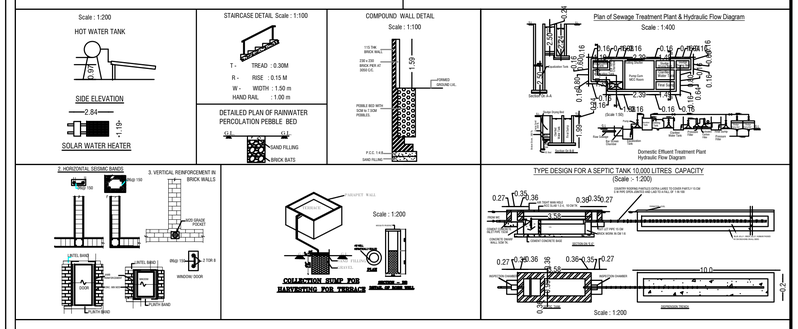

தலைமை ஆசிரியர்
கள்ளக்குறிச்சி மாவட்ட அரசு மாதிரி பள்ளி
கள்ளக்குறிச்சி - 606 202.

APPLICANT

22/12/24

REGISTERED STRUCTURAL ENGINEER

22/12/24

REGISTERED ENGINEER

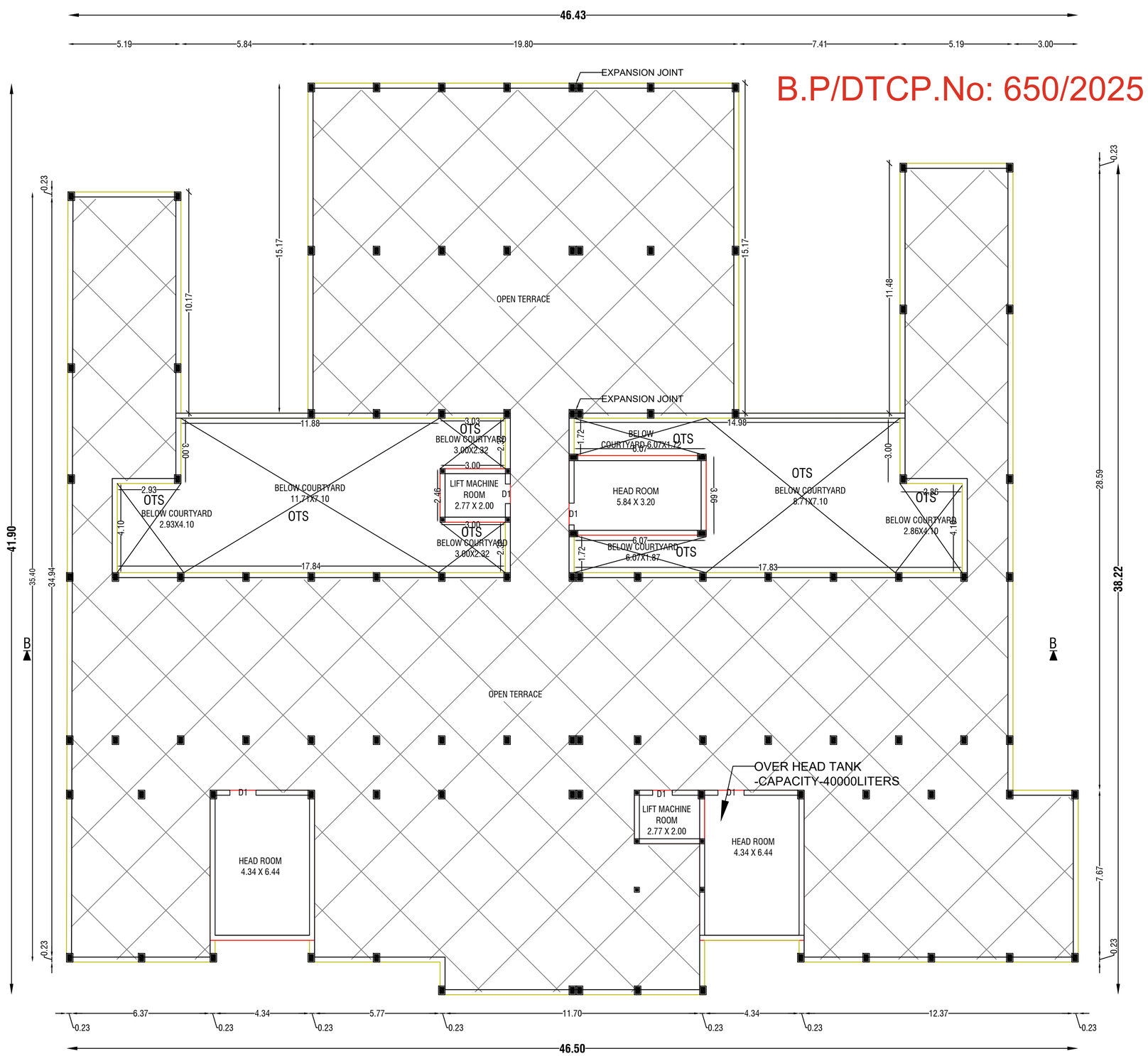

BLOCK-2-GIRL'S HOSTEL-TERRACE FLOOR PLAN

N

ALL DIMENSIONS ARE IN METER

Scale:- 1 : 100 | **Sheet No : 14/20**

BLOCK 3- GIRL'S HOSTEL-TERRACE FLOOR

DETAILED PLAN SHOWING THE PROPOSED R.C.C. ROOFED CONSTRUCTION OF THE EDUCATIONAL BUILDING IN S.F.NO:82/1 OF VADAPOONDI & 197/2B & 2D OF NAGALOOR VILLAGE, KALLAKURICHI TALUK , KALLAKURICHI DISTRICT.

APPLICANT :THE HEADMASTER (GOVERNMENT HIGHER SECONDARY SCHOOL)

AREA STATEMENT

VILLAGE	SF.No.	AREA AS PER ORDER COPY IN Sq.M.	IN SFT.	IN HEC.
VADAPOONDI	82/1	19800.00	213125.40	1.98.00
NAGALOOR	197/2B	807.00	8686.47	0.08.07
	197/2D	850.00	9149.32	0.08.50
	TOTAL	21457.00	2230961.19	2.14.57
AS PER FMB		21222.47		

JOINERY DETAILS

SYM	DESCRIPTION	IN METER
M.D	STEEL FRAMED TOUGHNED GLASS DOORS	2.00 X 2.40
D1	STEEL FRAMED DOOR WITH STEEL SHUTTERS WITH PARTLY GLAZED AND MDF SHUTTER DOORS	1.50 X 2.10
D2	STEEL FRAMED DOOR WITH MDF SHUTTER	1.20 X 2.10
D3	STEEL FRAMED DOOR WITH MDF SHUTTER	1.00 X 2.10
D4	ABS DOOR	1.00 X 2.10
W	UPVC FRAMED WINDOWS WITH SHUTTERS	1.80 X 1.50
W1	UPVC FRAMED WINDOWS WITH SHUTTERS	1.50 X 1.50
W2	UPVC FRAMED WINDOWS WITH SHUTTERS	1.20 X 1.50
SW	UPVC FRAMED WINDOWS WITH SHUTTERS (SLIDING)	1.80 X 1.50
SD	SLIDING SHUTTER ABS DOOR	1.00 X 2.10
V	STEEL FRAMED GLAZED VENTILATOR WITH M.S. GRILLE	2.40 X 0.75
V1	STEEL FRAMED GLAZED VENTILATOR WITH M.S. GRILLE	2.00 X 0.75
V2	STEEL FRAMED GLAZED VENTILATOR WITH M.S. GRILLE	1.50 X 0.75
V3	STEEL FRAMED GLAZED VENTILATOR WITH M.S. GRILLE	0.90 X 0.75
FG1	FIXED GLAZING	1.20 X 2.75
FG2	FIXED GLAZING	1.20 X 6.05
J	CONCRETE JOLLY	1.50 X 1.30

LEGEND

Block Name	Floor Name	Floor Area in Sq.m	Deduction Area in Sq.m	Total FSI Area in Sq.m	Total Non-FSI Area in Sq.m	Total Built up Area in Sq.m
Block-1 Proposed (School)	Ground Floor	2172.94	259.58	1913.36	-	1913.36
	First Floor	2172.94	290.35	1882.59	-	1882.59
	Second Floor	2103.75	290.53	1813.22	-	1813.22
	Terrace Floor	-	-	-	41.54	41.54
	TOTAL	6449.63	840.46	5609.17	41.54	5650.71
Block-2 Proposed Girl's Hostel	Ground Floor	1695.38	302.08	1393.30	-	1393.30
	First Floor	1568.65	207.55	1361.10	-	1361.10
	Second Floor	1568.65	207.55	1361.10	-	1361.10
	Third Floor	1568.65	207.55	1361.10	-	1361.10
	Fourth Floor	1568.65	207.55	1361.10	-	1361.10
	Terrace Floor	-	-	-	103.94	103.94
	TOTAL	7969.98	1132.28	6837.70	103.94	6941.64
Block-3 Proposed Boy's Hostel	Ground Floor	1695.38	302.08	1393.30	-	1393.30
	First Floor	1568.65	207.55	1361.10	-	1361.10
	Second Floor	1568.65	207.55	1361.10	-	1361.10
	Third Floor	1568.65	207.55	1361.10	-	1361.10
	Fourth Floor	1568.65	207.55	1361.10	-	1361.10
	Terrace Floor	-	-	-	103.94	103.94
	TOTAL	7969.98	1132.28	6837.70	103.94	6941.64
GRAND TOTAL		22389.59	2759.10	19303.77	249.42	19533.99
FLOOR SPACE INDEX		0.909<2.00				
PLOT COVERAGE		22.14%<50%				

FIRE SAFETY EQUIPMENT

SMOKE DEDICATOR/AUTO SPRINKLER	FIRE HYDRENT
EMERGENCY LIGHT	FIRE ALARM
FIRE ALARM SWITCH	FIRE EXTINGUISHER

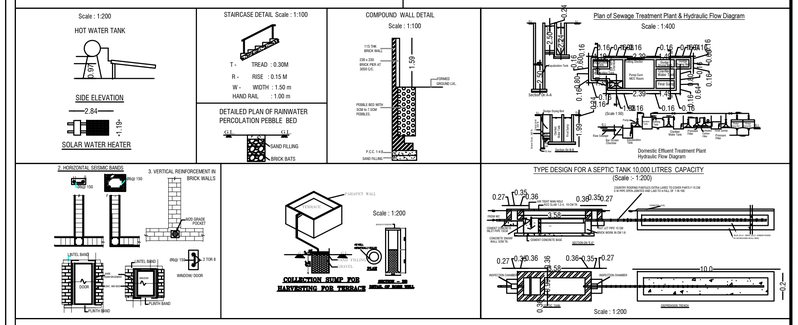

தலைமை ஆசிரியர்
கள்ளக்குறிச்சி மாவட்ட அரசு மாதிரி பள்ளி
கள்ளக்குறிச்சி - 606 202.

APPLICANT

REGISTERED STRUCTURAL ENGINEER

REGISTERED ENGINEER

B.P/DTCP.No: 650/2025

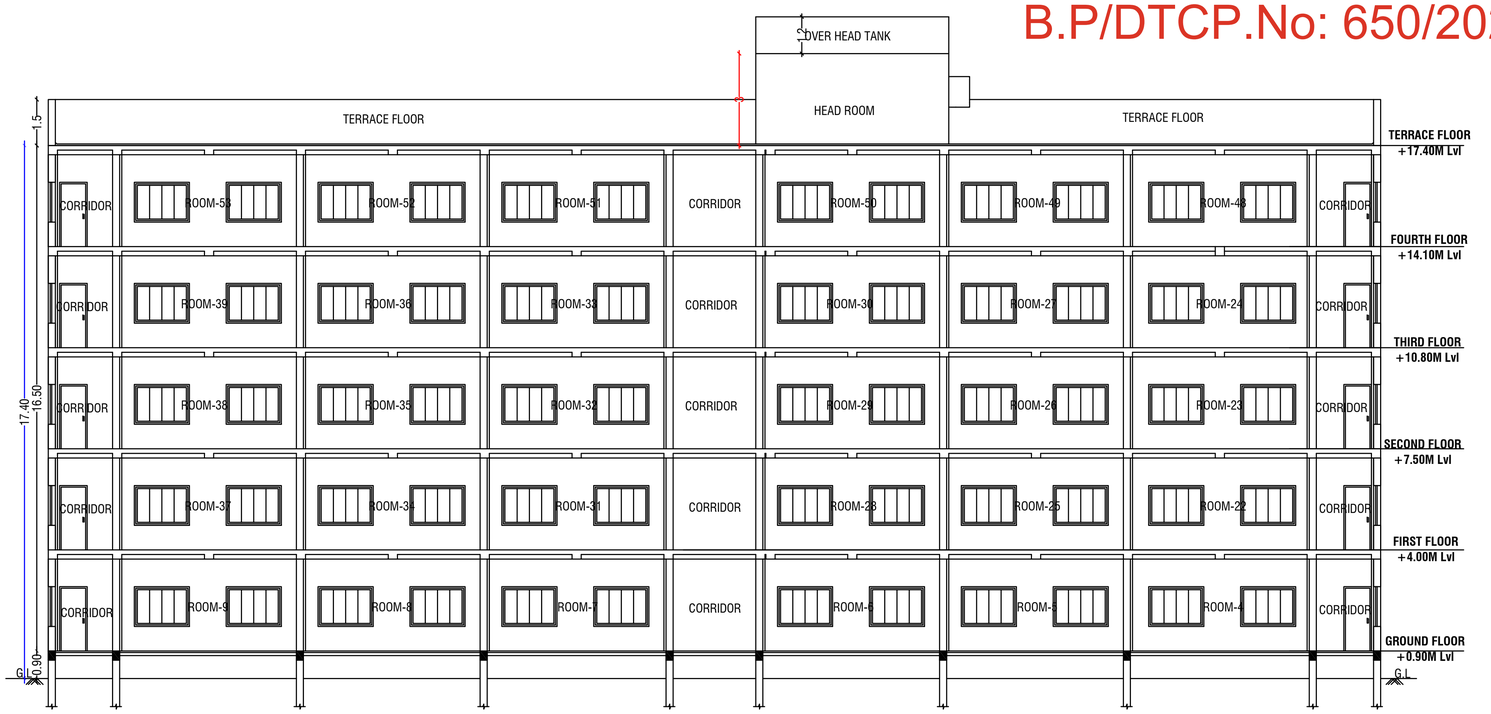

BLOCK-2-GIRL'S HOSTEL-SECTION - BB

BLOCK-2-GIRL'S HOSTEL -ELEVATION

N	ALL DIMENSIONS ARE IN METER	Scale:- 1 : 100	Sheet No : 15/20
		BLOCK 2- GIRL'S HOSTEL-ELEVATION & SECTION -BB	

DETAILED PLAN SHOWING THE PROPOSED R.C.C. ROOFED CONSTRUCTION OF THE EDUCATIONAL BUILDING IN S.F.NO:82/1 OF VADAPOONDI & 197/2B & 2D OF NAGALOOR VILLAGE, KALLAKURICHI TALUK , KALLAKURICHI DISTRICT.

APPLICANT :THE HEADMASTER (GOVERNMENT HIGHER SECONDARY SCHOOL)

AREA STATEMENT

VILLAGE	SF.No.	AREA AS PER ORDER COPY IN Sq.M.	IN SFT.	IN HEC.
VADAPOONDI	82/1	19800.00	213125.40	1.98.00
NAGALOOR	197/2B	807.00	8686.47	0.08.07
	197/2D	850.00	9149.32	0.08.50
	TOTAL	21457.00	2230961.19	2.14.57
AS PER FMB		21222.47		

JOINERY DETAILS

SYM	DESCRIPTION	IN METER
M.D	STEEL FRAMED TOUGHNED GLASS DOORS	2.00 X 2.40
D1	STEEL FRAMED DOOR WITH STEEL SHUTTERS WITH PARTLY GLAZED AND MDF SHUTTER DOORS	1.50 X 2.10
D2	STEEL FRAMED DOOR WITH MDF SHUTTER	1.20 X 2.10
D3	STEEL FRAMED DOOR WITH MDF SHUTTER	1.00 X 2.10
D4	ABS DOOR	1.00 X 2.10
W	UPVC FRAMED WINDOWS WITH SHUTTERS	1.80 X 1.50
W1	UPVC FRAMED WINDOWS WITH SHUTTERS	1.50 X 1.50
W2	UPVC FRAMED WINDOWS WITH SHUTTERS	1.20 X 1.50
SW	UPVC FRAMED WINDOWS WITH SHUTTERS (SLIDING)	1.80 X 1.50
SD	SLIDING SHUTTER ABS DOOR	1.00 X 2.10
V	STEEL FRAMED GLAZED VENTILATOR WITH M.S. GRILLE	2.40 X 0.75
V1	STEEL FRAMED GLAZED VENTILATOR WITH M.S. GRILLE	2.00 X 0.75
V2	STEEL FRAMED GLAZED VENTILATOR WITH M.S. GRILLE	1.50 X 0.75
V3	STEEL FRAMED GLAZED VENTILATOR WITH M.S. GRILLE	0.90 X 0.75
FG1	FIXED GLAZING	1.20 X 2.75
FG2	FIXED GLAZING	1.20 X 6.05
J	CONCRETE JOLLY	1.50 X 1.30

LEGEND

Block Name	Floor Name	Floor Area in Sq.m	Deduction Area in Sq.m	Total FSI Area in Sq.m	Total Non-FSI Area in Sq.m	Total Built up Area in Sq.m
Block-1 Proposed (School)	Ground Floor	2172.94	259.58	1913.36	-	1913.36
	First Floor	2172.94	290.35	1882.59	-	1882.59
	Second Floor	2103.75	290.53	1813.22	-	1813.22
	Terrace Floor	-	-	-	41.54	41.54
	TOTAL	6449.63	840.46	5609.17	41.54	5650.71
Block-2 Proposed Girl's Hostel	Ground Floor	1695.38	302.08	1393.30	-	1393.30
	First Floor	1568.65	207.55	1361.10	-	1361.10
	Second Floor	1568.65	207.55	1361.10	-	1361.10
	Third Floor	1568.65	207.55	1361.10	-	1361.10
	Fourth Floor	1568.65	207.55	1361.10	-	1361.10
	Terrace Floor	-	-	-	103.94	103.94
	TOTAL	7969.98	1132.28	6837.70	103.94	6941.64
Block-3 Proposed Boy's Hostel	Ground Floor	1695.38	302.08	1393.30	-	1393.30
	First Floor	1568.65	207.55	1361.10	-	1361.10
	Second Floor	1568.65	207.55	1361.10	-	1361.10
	Third Floor	1568.65	207.55	1361.10	-	1361.10
	Fourth Floor	1568.65	207.55	1361.10	-	1361.10
	Terrace Floor	-	-	-	103.94	103.94
	TOTAL	7969.98	1132.28	6837.70	103.94	6941.64
GRAND TOTAL		22389.59	2759.10	19303.77	249.42	19533.99

FLOOR SPACE INDEX	0.909<2.00
PLOT COVERAGE	22.14%<50%

FIRE SAFETY EQUIPMENT

SMOKE DEDICATOR/AUTO SPRINKLER	FIRE HYDRENT
EMERGENCY LIGHT	FIRE ALARM
FIRE ALARM SWITCH	FIRE EXTINGUISHER

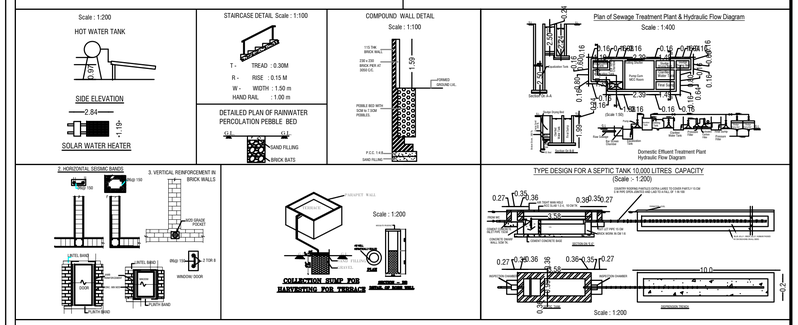

தலைமை ஆசிரியர்
கள்ளக்குறிச்சி மாவட்ட அரசு மாதிரி பள்ளி
கள்ளக்குறிச்சி - 606 202.

APPLICANT

22/12/24

REGISTERED STRUCTURAL ENGINEER

22/12/24

REGISTERED ENGINEER

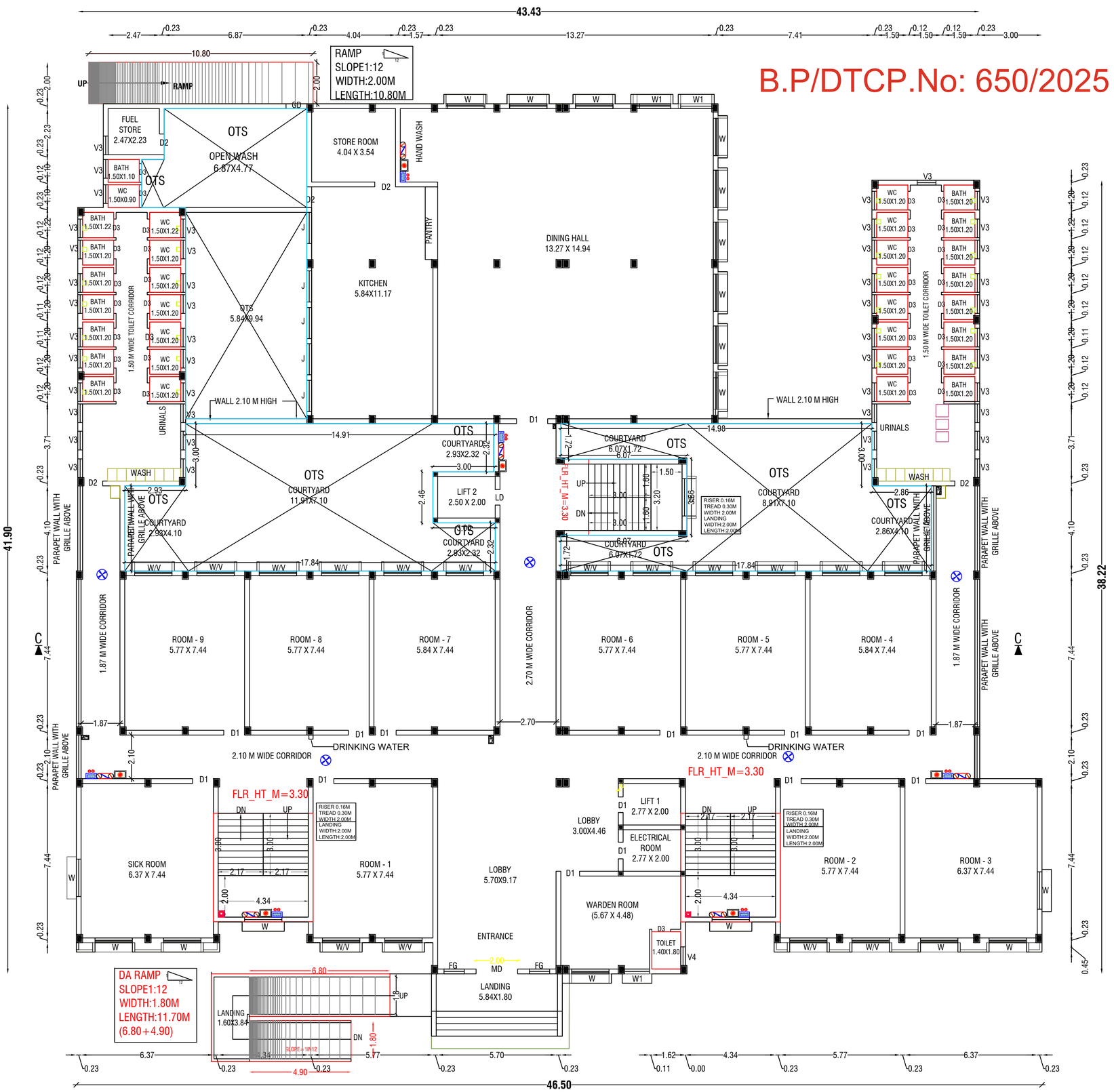

BLOCK-3-BOY'S HOSTEL-GROUND FLOOR PLAN

N

ALL DIMENSIONS ARE IN METER

Scale:- 1 : 100 | **Sheet No : 16/20**

BLOCK 3- BOY'S HOSTEL-GROUND FLOOR PLAN

DETAILED PLAN SHOWING THE PROPOSED R.C.C. ROOFED CONSTRUCTION OF THE EDUCATIONAL BUILDING IN S.F.NO:82/1 OF VADAPOONDI & 197/2B & 2D OF NAGALOOR VILLAGE, KALLAKURICHI TALUK , KALLAKURICHI DISTRICT.

APPLICANT :THE HEADMASTER (GOVERNMENT HIGHER SECONDARY SCHOOL)

AREA STATEMENT

VILLAGE	SF.No.	AREA AS PER ORDER COPY		
		IN Sq.M.	IN SFT.	IN HEC.
VADAPOONDI	82/1	19800.00	213125.40	1.98.00
NAGALOOR	197/2B	807.00	8686.47	0.08.07
	197/2D	850.00	9149.32	0.08.50
	TOTAL	21457.00	2230961.19	2.14.57
AS PER FMB		21222.47		

JOINERY DETAILS

SYM	DESCRIPTION	IN METER
M.D	STEEL FRAMED TOUGHNED GLASS DOORS	2.00 X 2.40
D1	STEEL FRAMED DOOR WITH STEEL SHUTTERS WITH PARTLY GLAZED AND MDF SHUTTER DOORS	1.50 X 2.10
D2	STEEL FRAMED DOOR WITH MDF SHUTTER	1.20 X 2.10
D3	STEEL FRAMED DOOR WITH MDF SHUTTER	1.00 X 2.10
D4	ABS DOOR	1.00 X 2.10
W	UPVC FRAMED WINDOWS WITH SHUTTERS	1.80 X 1.50
W1	UPVC FRAMED WINDOWS WITH SHUTTERS	1.50 X 1.50
W2	UPVC FRAMED WINDOWS WITH SHUTTERS	1.20 X 1.50
SW	UPVC FRAMED WINDOWS WITH SHUTTERS (SLIDING)	1.80 X 1.50
SD	SLIDING SHUTTER ABS DOOR	1.00 X 2.10
V	STEEL FRAMED GLAZED VENTILATOR WITH M.S. GRILLE	2.40 X 0.75
V1	STEEL FRAMED GLAZED VENTILATOR WITH M.S. GRILLE	2.00 X 0.75
V2	STEEL FRAMED GLAZED VENTILATOR WITH M.S. GRILLE	1.50 X 0.75
V3	STEEL FRAMED GLAZED VENTILATOR WITH M.S. GRILLE	0.90 X 0.75
FG1	FIXED GLAZING	1.20 X 2.75
FG2	FIXED GLAZING	1.20 X 6.05
J	CONCRETE JOLLY	1.50 X 1.30

LEGEND

Block Name	Floor Name	Floor Area in Sq.m	Deduction Area in Sq.m	Total FSI Area in Sq.m	Total Non-FSI Area in Sq.m	Total Built up Area in Sq.m
Block-1 Proposed (School)	Ground Floor	2172.94	259.58	1913.36	-	1913.36
	First Floor	2172.94	290.35	1882.59	-	1882.59
	Second Floor	2103.75	290.53	1813.22	-	1813.22
	Terrace Floor	-	-	-	41.54	41.54
	TOTAL	6449.63	840.46	5609.17	41.54	5650.71
Block-2 Proposed Girl's Hostel	Ground Floor	1695.38	302.08	1393.30	-	1393.30
	First Floor	1568.65	207.55	1361.10	-	1361.10
	Second Floor	1568.65	207.55	1361.10	-	1361.10
	Third Floor	1568.65	207.55	1361.10	-	1361.10
	Fourth Floor	1568.65	207.55	1361.10	-	1361.10
	Terrace Floor	-	-	-	103.94	103.94
	TOTAL	7969.98	1132.28	6837.70	103.94	6941.64
Block-3 Proposed Boy's Hostel	Ground Floor	1695.38	302.08	1393.30	-	1393.30
	First Floor	1568.65	207.55	1361.10	-	1361.10
	Second Floor	1568.65	207.55	1361.10	-	1361.10
	Third Floor	1568.65	207.55	1361.10	-	1361.10
	Fourth Floor	1568.65	207.55	1361.10	-	1361.10
	Terrace Floor	-	-	-	103.94	103.94
	TOTAL	7969.98	1132.28	6837.70	103.94	6941.64
GRAND TOTAL		22389.59	2759.10	19303.77	249.42	19533.99
FLOOR SPACE INDEX		0.909<2.00				
PLOT COVERAGE		22.14%<50%				

FIRE SAFETY EQUIPMENT

SMOKE DEDICATOR/AUTO SPRINKLER

EMERGENCY LIGHT

FIRE ALARM SWITCH

FIRE HYDRENT

FIRE ALARM

FIRE EXTINGUISHER

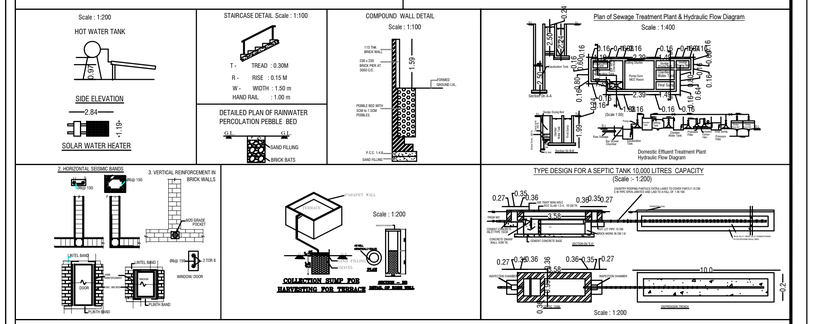

தலைமை ஆசிரியர்
கள்ளக்குறிச்சி மாவட்ட அரசு மாதிரி பள்ளி
கள்ளக்குறிச்சி - 606 202.

APPLICANT

REGISTERED STRUCTURAL ENGINEER

REGISTERED ENGINEER

B.P/DTCP.No: 650/2025

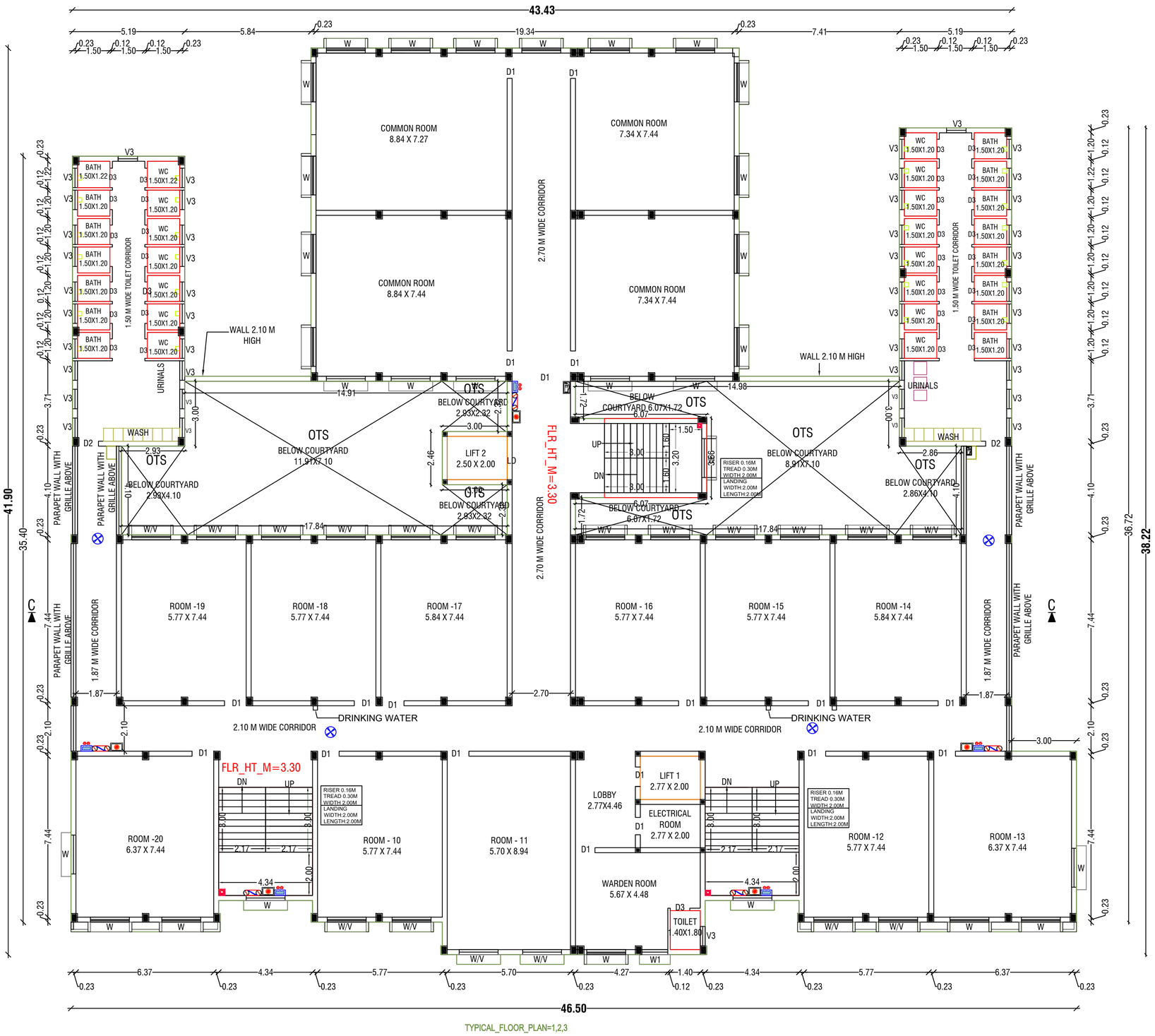

TYPICAL_FLOOR_PLAN=1,2,3

BLOCK-3-BOY'S HOSTEL-TYPICAL FLOOR-1,2&3

N	ALL DIMENSIONS ARE IN METER	Scale:- 1 : 100	Sheet No : 17/20
		BLOCK 3- BOY'S HOSTEL-TYPICAL FLOOR PLAN-1,2&3	

DETAILED PLAN SHOWING THE PROPOSED R.C.C. ROOFED CONSTRUCTION OF THE EDUCATIONAL BUILDING IN S.F.NO:82/1 OF VADAPOONDI & 197/2B & 2D OF NAGALOOR VILLAGE, KALLAKURICHI TALUK , KALLAKURICHI DISTRICT.

APPLICANT :THE HEADMASTER (GOVERNMENT HIGHER SECONDARY SCHOOL)

AREA STATEMENT

VILLAGE	SF.No.	AREA AS PER ORDER COPY IN Sq.M.	IN SFT.	IN HEC.
VADAPOONDI	82/1	19800.00	213125.40	1.98.00
NAGALOOR	197/2B	807.00	8686.47	0.08.07
	197/2D	850.00	9149.32	0.08.50
	TOTAL	21457.00	2230961.19	2.14.57
AS PER FMB		21222.47		

JOINERY DETAILS

SYM	DESCRIPTION	IN METER
M.D	STEEL FRAMED TOUGHNED GLASS DOORS	2.00 X 2.40
D1	STEEL FRAMED DOOR WITH STEEL SHUTTERS WITH PARTLY GLAZED AND MDF SHUTTER DOORS	1.50 X 2.10
D2	STEEL FRAMED DOOR WITH MDF SHUTTER	1.20 X 2.10
D3	STEEL FRAMED DOOR WITH MDF SHUTTER	1.00 X 2.10
D4	ABS DOOR	1.00 X 2.10
W	UPVC FRAMED WINDOWS WITH SHUTTERS	1.80 X 1.50
W1	UPVC FRAMED WINDOWS WITH SHUTTERS	1.50 X 1.50
W2	UPVC FRAMED WINDOWS WITH SHUTTERS	1.20 X 1.50
SW	UPVC FRAMED WINDOWS WITH SHUTTERS (SLIDING)	1.80 X 1.50
SD	SLIDING SHUTTER ABS DOOR	1.00 X 2.10
V	STEEL FRAMED GLAZED VENTILATOR WITH M.S. GRILLE	2.40 X 0.75
V1	STEEL FRAMED GLAZED VENTILATOR WITH M.S. GRILLE	2.00 X 0.75
V2	STEEL FRAMED GLAZED VENTILATOR WITH M.S. GRILLE	1.50 X 0.75
V3	STEEL FRAMED GLAZED VENTILATOR WITH M.S. GRILLE	0.90 X 0.75
FG1	FIXED GLAZING	1.20 X 2.75
FG2	FIXED GLAZING	1.20 X 6.05
J	CONCRETE JOLLY	1.50 X 1.30

LEGEND

Block Name	Floor Name	Floor Area in Sq.m	Deduction Area in Sq.m	Total FSI Area in Sq.m	Total Non-FSI Area in Sq.m	Total Built up Area in Sq.m
Block-1 Proposed (School)	Ground Floor	2172.94	259.58	1913.36	-	1913.36
	First Floor	2172.94	290.35	1882.59	-	1882.59
	Second Floor	2103.75	290.53	1813.22	-	1813.22
	Terrace Floor	-	-	-	41.54	41.54
	TOTAL	6449.63	840.46	5609.17	41.54	5650.71
Block-2 Proposed Girl's Hostel	Ground Floor	1695.38	302.08	1393.30	-	1393.30
	First Floor	1568.65	207.55	1361.10	-	1361.10
	Second Floor	1568.65	207.55	1361.10	-	1361.10
	Third Floor	1568.65	207.55	1361.10	-	1361.10
	Fourth Floor	1568.65	207.55	1361.10	-	1361.10
	Terrace Floor	-	-	-	103.94	103.94
	TOTAL	7969.98	1132.28	6837.70	103.94	6941.64
Block-3 Proposed Boy's Hostel	Ground Floor	1695.38	302.08	1393.30	-	1393.30
	First Floor	1568.65	207.55	1361.10	-	1361.10
	Second Floor	1568.65	207.55	1361.10	-	1361.10
	Third Floor	1568.65	207.55	1361.10	-	1361.10
	Fourth Floor	1568.65	207.55	1361.10	-	1361.10
	Terrace Floor	-	-	-	103.94	103.94
	TOTAL	7969.98	1132.28	6837.70	103.94	6941.64
GRAND TOTAL		22389.59	2759.10	19303.77	249.42	19533.99
FLOOR SPACE INDEX		0.909<2.00				
PLOT COVERAGE		22.14%<50%				

FIRE SAFETY EQUIPMENT

SMOKE DEDICATOR/AUTO SPRINKLER
EMERGENCY LIGHT
FIRE ALARM SWITCH
FIRE HYDRENT
FIRE ALARM
FIRE EXTINGUISHER

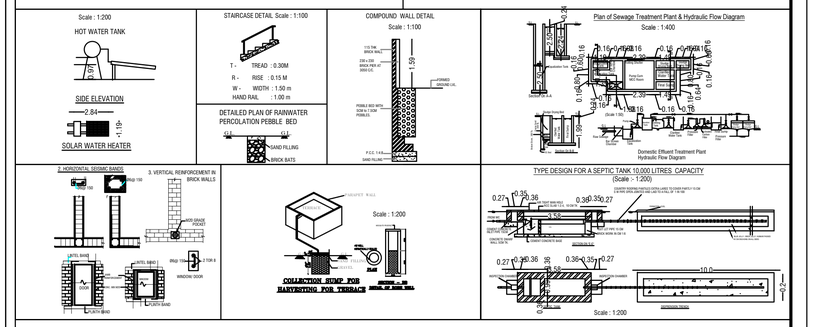

தலைமை ஆசிரியர்
கள்ளக்குறிச்சி மாவட்ட அரசு மாதிரி பள்ளி
கள்ளக்குறிச்சி - 606 202.

APPLICANT

REGISTERED STRUCTURAL ENGINEER

REGISTERED ENGINEER

B.P/DTCP.No: 650/2025

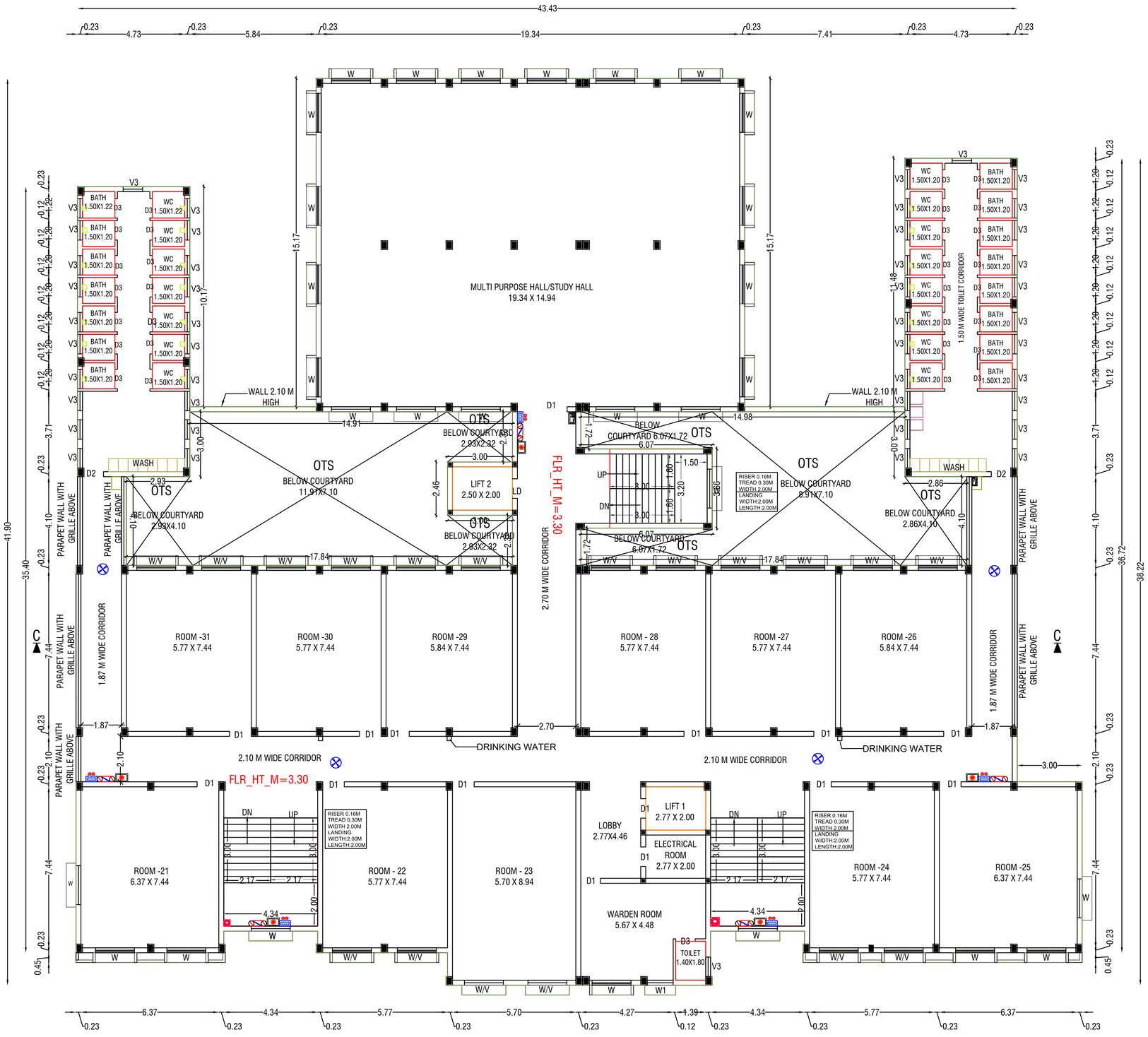

BLOCK-3-BOY'S HOSTEL-FOURTH FLOOR

N	ALL DIMENSIONS ARE IN METER	Scale:- 1 : 100	Sheet No : 18/20
		BLOCK 3- BOY'S HOSTEL-FOURTH FLOOR PLAN	

DETAILED PLAN SHOWING THE PROPOSED R.C.C. ROOFED CONSTRUCTION OF THE EDUCATIONAL BUILDING IN S.F.NO:82/1 OF VADAPOONDI & 197/2B & 2D OF NAGALOOR VILLAGE, KALLAKURICHI TALUK , KALLAKURICHI DISTRICT.

APPLICANT :THE HEADMASTER (GOVERNMENT HIGHER SECONDARY SCHOOL)

AREA STATEMENT

VILLAGE	SF.No.	AREA AS PER ORDER COPY IN Sq.M.	IN SFT.	IN HEC.
VADAPOONDI	82/1	19800.00	213125.40	1.98.00
NAGALOOR	197/2B	807.00	8686.47	0.08.07
	197/2D	850.00	9149.32	0.08.50
	TOTAL	21457.00	2230961.19	2.14.57
AS PER FMB		21222.47		

JOINERY DETAILS

SYM	DESCRIPTION	IN METER
M.D	STEEL FRAMED TOUGHNED GLASS DOORS	2.00 X 2.40
D1	STEEL FRAMED DOOR WITH STEEL SHUTTERS WITH PARTLY GLAZED AND MDF SHUTTER DOORS	1.50 X 2.10
D2	STEEL FRAMED DOOR WITH MDF SHUTTER	1.20 X 2.10
D3	STEEL FRAMED DOOR WITH MDF SHUTTER	1.00 X 2.10
D4	ABS DOOR	1.00 X 2.10
W	UPVC FRAMED WINDOWS WITH SHUTTERS	1.80 X 1.50
W1	UPVC FRAMED WINDOWS WITH SHUTTERS	1.50 X 1.50
W2	UPVC FRAMED WINDOWS WITH SHUTTERS	1.20 X 1.50
SW	UPVC FRAMED WINDOWS WITH SHUTTERS (SLIDING)	1.80 X 1.50
SD	SLIDING SHUTTER ABS DOOR	1.00 X 2.10
V	STEEL FRAMED GLAZED VENTILATOR WITH M.S. GRILLE	2.40 X 0.75
V1	STEEL FRAMED GLAZED VENTILATOR WITH M.S. GRILLE	2.00 X 0.75
V2	STEEL FRAMED GLAZED VENTILATOR WITH M.S. GRILLE	1.50 X 0.75
V3	STEEL FRAMED GLAZED VENTILATOR WITH M.S. GRILLE	0.90 X 0.75
FG1	FIXED GLAZING	1.20 X 2.75
FG2	FIXED GLAZING	1.20 X 6.05
J	CONCRETE JOLLY	1.50 X 1.30

LEGEND

Block Name	Floor Name	Floor Area in Sq.m	Deduction Area in Sq.m	Total FSI Area in Sq.m	Total Non-FSI Area in Sq.m	Total Built up Area in Sq.m
Block-1 Proposed (School)	Ground Floor	2172.94	259.58	1913.36	-	1913.36
	First Floor	2172.94	290.35	1882.59	-	1882.59
	Second Floor	2103.75	290.53	1813.22	-	1813.22
	Terrace Floor	-	-	-	41.54	41.54
	TOTAL	6449.63	840.46	5609.17	41.54	5650.71
Block-2 Proposed Girl's Hostel	Ground Floor	1695.38	302.08	1393.30	-	1393.30
	First Floor	1568.65	207.55	1361.10	-	1361.10
	Second Floor	1568.65	207.55	1361.10	-	1361.10
	Third Floor	1568.65	207.55	1361.10	-	1361.10
	Fourth Floor	1568.65	207.55	1361.10	-	1361.10
	Terrace Floor	-	-	-	103.94	103.94
	TOTAL	7969.98	1132.28	6837.70	103.94	6941.64
Block-3 Proposed Boy's Hostel	Ground Floor	1695.38	302.08	1393.30	-	1393.30
	First Floor	1568.65	207.55	1361.10	-	1361.10
	Second Floor	1568.65	207.55	1361.10	-	1361.10
	Third Floor	1568.65	207.55	1361.10	-	1361.10
	Fourth Floor	1568.65	207.55	1361.10	-	1361.10
	Terrace Floor	-	-	-	103.94	103.94
	TOTAL	7969.98	1132.28	6837.70	103.94	6941.64
GRAND TOTAL		22389.59	2759.10	19303.77	249.42	19533.99
FLOOR SPACE INDEX		0.909<2.00				
PLOT COVERAGE		22.14%<50%				

FIRE SAFETY EQUIPMENT

SMOKE DEDICATOR/AUTO SPRINKLER
EMERGENCY LIGHT
FIRE ALARM SWITCH
FIRE HYDRENT
FIRE ALARM
FIRE EXTINGUISHER

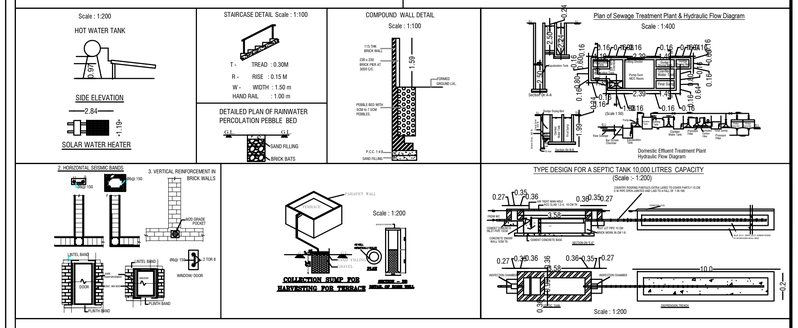

தலைமை ஆசிரியர்
கள்ளக்குறிச்சி மாவட்ட அரசு மாதிரி பள்ளி
கள்ளக்குறிச்சி - 606 202.

APPLICANT

REGISTERED STRUCTURAL ENGINEER

REGISTERED ENGINEER

B.P/DTCP.No: 650/2025

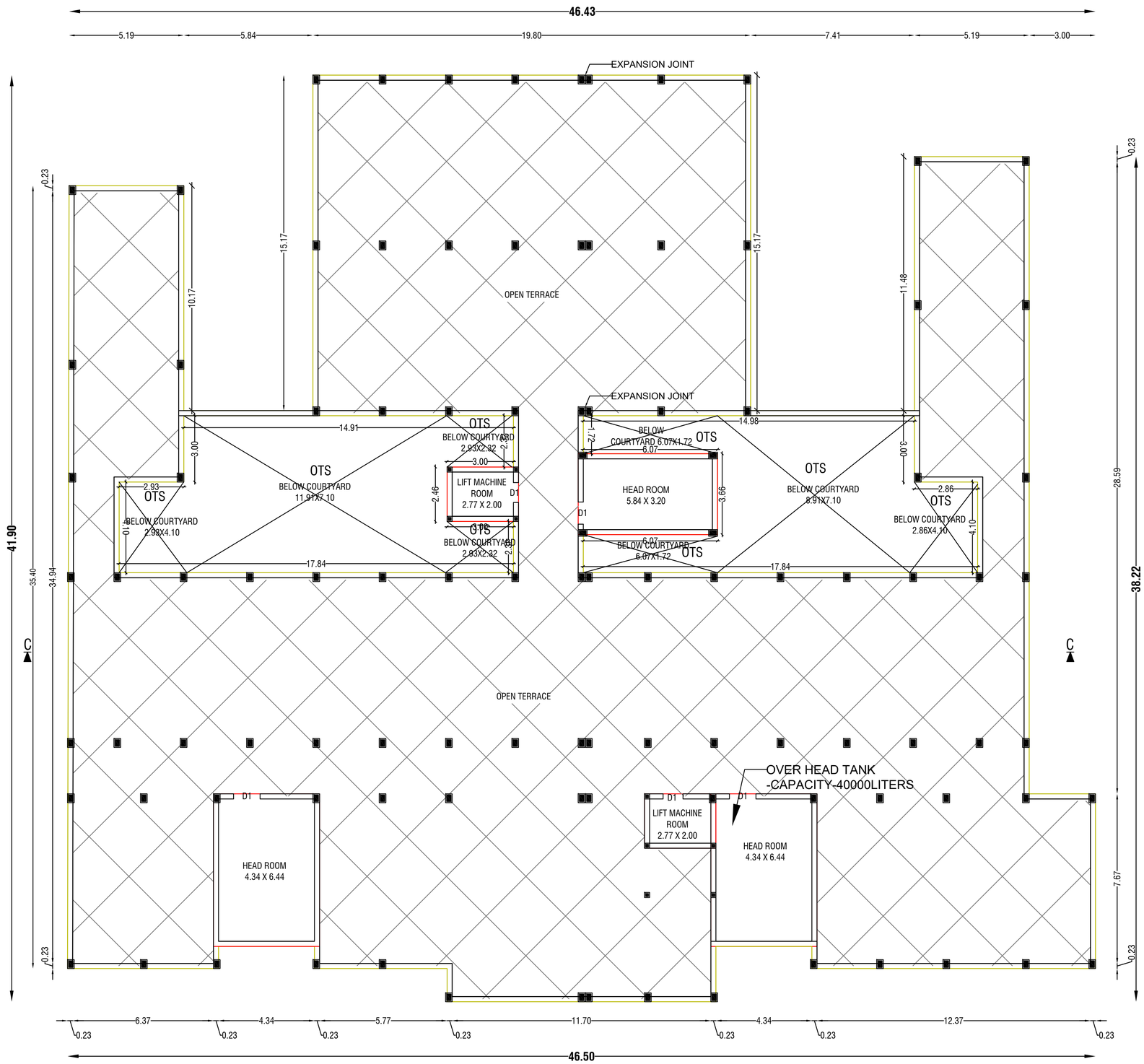

BLOCK-3-BOY'S HOSTEL-TERRACE FLOOR PLAN

N	ALL DIMENSIONS ARE IN METER	Scale:- 1 : 100	Sheet No : 19/20
		BLOCK 3- BOY'S HOSTEL-TERRACE FLOOR	

DETAILED PLAN SHOWING THE PROPOSED R.C.C. ROOFED CONSTRUCTION OF THE EDUCATIONAL BUILDING IN S.F.NO:82/1 OF VADAPOONDI & 197/2B & 2D OF NAGALOOR VILLAGE, KALLAKURICHI TALUK , KALLAKURICHI DISTRICT.

APPLICANT :THE HEADMASTER (GOVERNMENT HIGHER SECONDARY SCHOOL)

AREA STATEMENT

VILLAGE	SF.No.	AREA AS PER ORDER COPY		
		IN Sq.M.	IN SFT.	IN HEC.
VADAPOONDI	82/1	19800.00	213125.40	1.98.00
NAGALOOR	197/2B	807.00	8686.47	0.08.07
	197/2D	850.00	9149.32	0.08.50
	TOTAL	21457.00	2230961.19	2.14.57
AS PER FMB		21222.47		

JOINERY DETAILS

SYM	DESCRIPTION	IN METER
M.D	STEEL FRAMED TOUGHNED GLASS DOORS	2.00 X 2.40
D1	STEEL FRAMED DOOR WITH STEEL SHUTTERS WITH PARTLY GLAZED AND MDF SHUTTER DOORS	1.50 X 2.10
D2	STEEL FRAMED DOOR WITH MDF SHUTTER	1.20 X 2.10
D3	STEEL FRAMED DOOR WITH MDF SHUTTER	1.00 X 2.10
D4	ABS DOOR	1.00 X 2.10
W	UPVC FRAMED WINDOWS WITH SHUTTERS	1.80 X 1.50
W1	UPVC FRAMED WINDOWS WITH SHUTTERS	1.50 X 1.50
W2	UPVC FRAMED WINDOWS WITH SHUTTERS	1.20 X 1.50
SW	UPVC FRAMED WINDOWS WITH SHUTTERS (SLIDING)	1.80 X 1.50
SD	SLIDING SHUTTER ABS DOOR	1.00 X 2.10
V	STEEL FRAMED GLAZED VENTILATOR WITH M.S. GRILLE	2.40 X 0.75
V1	STEEL FRAMED GLAZED VENTILATOR WITH M.S. GRILLE	2.00 X 0.75
V2	STEEL FRAMED GLAZED VENTILATOR WITH M.S. GRILLE	1.50 X 0.75
V3	STEEL FRAMED GLAZED VENTILATOR WITH M.S. GRILLE	0.90 X 0.75
FG1	FIXED GLAZING	1.20 X 2.75
FG2	FIXED GLAZING	1.20 X 6.05
J	CONCRETE JOLLY	1.50 X 1.30

LEGEND

Block Name	Floor Name	Floor Area in Sq.m	Deduction Area in Sq.m	Total FSI Area in Sq.m	Total Non-FSI Area in Sq.m	Total Built up Area in Sq.m
Block-1 Proposed (School)	Ground Floor	2172.94	259.58	1913.36	-	1913.36
	First Floor	2172.94	290.35	1882.59	-	1882.59
	Second Floor	2103.75	290.53	1813.22	-	1813.22
	Terrace Floor	-	-	-	41.54	41.54
	TOTAL	6449.63	840.46	5609.17	41.54	5650.71
Block-2 Proposed Girl's Hostel	Ground Floor	1695.38	302.08	1393.30	-	1393.30
	First Floor	1568.65	207.55	1361.10	-	1361.10
	Second Floor	1568.65	207.55	1361.10	-	1361.10
	Third Floor	1568.65	207.55	1361.10	-	1361.10
	Fourth Floor	1568.65	207.55	1361.10	-	1361.10
	Terrace Floor	-	-	-	103.94	103.94
	TOTAL	7969.98	1132.28	6837.70	103.94	6941.64
Block-3 Proposed Boy's Hostel	Ground Floor	1695.38	302.08	1393.30	-	1393.30
	First Floor	1568.65	207.55	1361.10	-	1361.10
	Second Floor	1568.65	207.55	1361.10	-	1361.10
	Third Floor	1568.65	207.55	1361.10	-	1361.10
	Fourth Floor	1568.65	207.55	1361.10	-	1361.10
	Terrace Floor	-	-	-	103.94	103.94
	TOTAL	7969.98	1132.28	6837.70	103.94	6941.64
GRAND TOTAL		22389.59	2759.10	19303.77	249.42	19533.99
FLOOR SPACE INDEX		0.909<2.00				
PLOT COVERAGE		22.14%<50%				

FIRE SAFETY EQUIPMENT

SMOKE DEDICATOR/AUTO SPRINKLER	FIRE HYDRENT
EMERGENCY LIGHT	FIRE ALARM
FIRE ALARM SWITCH	FIRE EXTINGUISHER

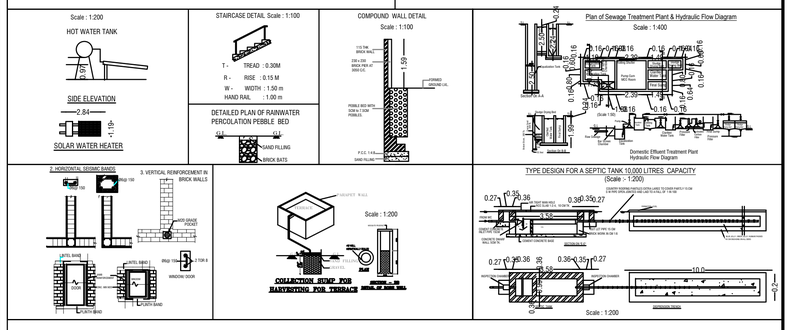

தலைமை ஆசிரியர்
கள்ளக்குறிச்சி மாவட்ட அரசு மாதிரி பள்ளி
கள்ளக்குறிச்சி - 606 202.

APPLICANT

22/12/24

REGISTERED STRUCTURAL ENGINEER

22/12/24

REGISTERED ENGINEER

B.P/DTCP.No: 650/2025

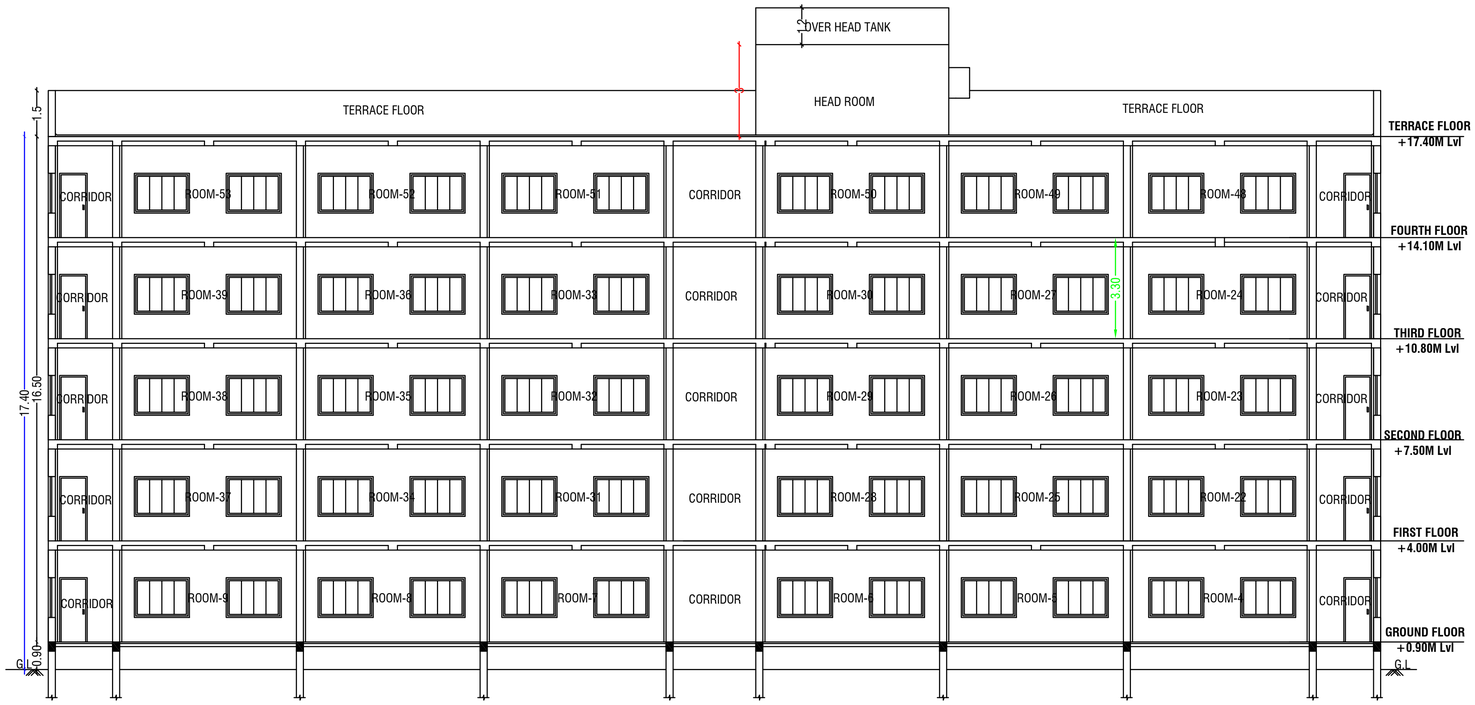

BLOCK-3-BOY'S HOSTEL - SECTION -CC

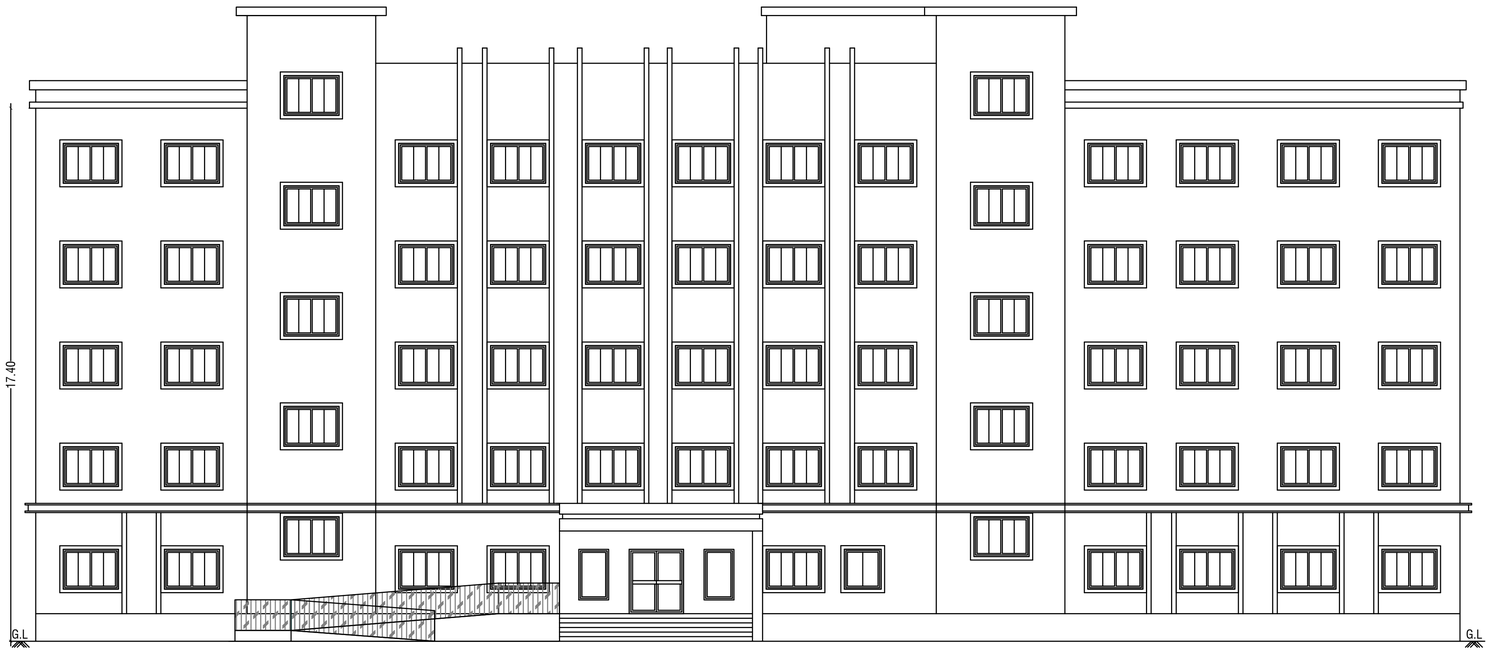

BLOCK-3-BOY'S HOSTEL -ELEVATION

N	ALL DIMENSIONS ARE IN METER	Scale:- 1 : 100	Sheet No : 20/20
		BLOCK 3- BOY'S HOSTEL-ELEVATION & SECTION -CC	

DETAILED PLAN SHOWING THE PROPOSED R.C.C. ROOFED CONSTRUCTION OF THE EDUCATIONAL BUILDING IN S.F.NO:82/1 OF VADAPOONDI & 197/2B & 2D OF NAGALOOR VILLAGE, KALLAKURICHI TALUK , KALLAKURICHI DISTRICT.

APPLICANT :THE HEADMASTER (GOVERNMENT HIGHER SECONDARY SCHOOL)

AREA STATEMENT

VILLAGE	SF.No.	AREA AS PER ORDER COPY IN Sq.M.	IN SFT.	IN HEC.
VADAPOONDI	82/1	19800.00	213125.40	1.98.00
NAGALOOR	197/2B	807.00	8686.47	0.08.07
	197/2D	850.00	9149.32	0.08.50
	TOTAL	21457.00	2230961.19	2.14.57
AS PER FMB		21222.47		

JOINERY DETAILS

SYM	DESCRIPTION	IN METER
M.D	STEEL FRAMED TOUGHNED GLASS DOORS	2.00 X 2.40
D1	STEEL FRAMED DOOR WITH STEEL SHUTTERS WITH PARTLY GLAZED AND MDF SHUTTER DOORS	1.50 X 2.10
D2	STEEL FRAMED DOOR WITH MDF SHUTTER	1.20 X 2.10
D3	STEEL FRAMED DOOR WITH MDF SHUTTER	1.00 X 2.10
D4	ABS DOOR	1.00 X 2.10
W	UPVC FRAMED WINDOWS WITH SHUTTERS	1.80 X 1.50
W1	UPVC FRAMED WINDOWS WITH SHUTTERS	1.50 X 1.50
W2	UPVC FRAMED WINDOWS WITH SHUTTERS	1.20 X 1.50
SW	UPVC FRAMED WINDOWS WITH SHUTTERS (SLIDING)	1.80 X 1.50
SD	SLIDING SHUTTER ABS DOOR	1.00 X 2.10
V	STEEL FRAMED GLAZED VENTILATOR WITH M.S. GRILLE	2.40 X 0.75
V1	STEEL FRAMED GLAZED VENTILATOR WITH M.S. GRILLE	2.00 X 0.75
V2	STEEL FRAMED GLAZED VENTILATOR WITH M.S. GRILLE	1.50 X 0.75
V3	STEEL FRAMED GLAZED VENTILATOR WITH M.S. GRILLE	0.90 X 0.75
FG1	FIXED GLAZING	1.20 X 2.75
FG2	FIXED GLAZING	1.20 X 6.05
J	CONCRETE JOLLY	1.50 X 1.30

LEGEND

Block Name	Floor Name	Floor Area in Sq.m	Deduction Area in Sq.m	Total FSI Area in Sq.m	Total Non-FSI Area in Sq.m	Total Built up Area in Sq.m
Block-1 Proposed (School)	Ground Floor	2172.94	259.58	1913.36	-	1913.36
	First Floor	2172.94	290.35	1882.59	-	1882.59
	Second Floor	2103.75	290.53	1813.22	-	1813.22
	Terrace Floor	-	-	-	41.54	41.54
	TOTAL	6449.63	840.46	5609.17	41.54	5650.71
Block-2 Proposed Girl's Hostel	Ground Floor	1695.38	302.08	1393.30	-	1393.30
	First Floor	1568.65	207.55	1361.10	-	1361.10
	Second Floor	1568.65	207.55	1361.10	-	1361.10
	Third Floor	1568.65	207.55	1361.10	-	1361.10
	Fourth Floor	1568.65	207.55	1361.10	-	1361.10
	Terrace Floor	-	-	-	103.94	103.94
	TOTAL	7969.98	1132.28	6837.70	103.94	6941.64
Block-3 Proposed Boy's Hostel	Ground Floor	1695.38	302.08	1393.30	-	1393.30
	First Floor	1568.65	207.55	1361.10	-	1361.10
	Second Floor	1568.65	207.55	1361.10	-	1361.10
	Third Floor	1568.65	207.55	1361.10	-	1361.10
	Fourth Floor	1568.65	207.55	1361.10	-	1361.10
	Terrace Floor	-	-	-	103.94	103.94
	TOTAL	7969.98	1132.28	6837.70	103.94	6941.64
GRAND TOTAL		22389.59	2759.10	19303.77	249.42	19533.99
FLOOR SPACE INDEX		0.909<2.00				
PLOT COVERAGE		22.14%<50%				

FIRE SAFETY EQUIPMENT

SMOKE DEDICATOR/AUTO SPRINKLER

EMERGENCY LIGHT

FIRE ALARM SWITCH

FIRE HYDRENT

FIRE ALARM

FIRE EXTINGUISHER

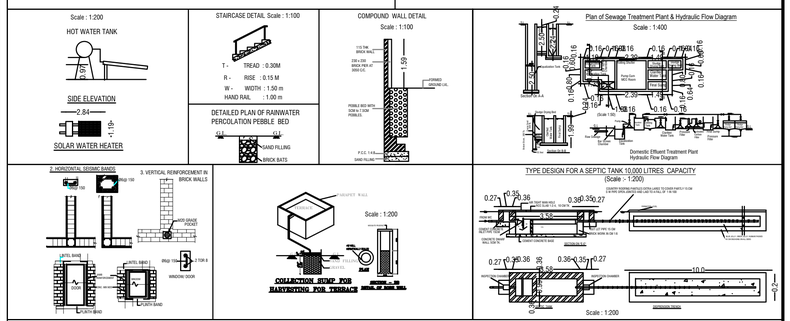

தலைமை ஆசிரியர்
கள்ளக்குறிச்சி மாவட்ட அரசு மாதிரி பள்ளி
கள்ளக்குறிச்சி - 606 202.

APPLICANT

22/12/24

REGISTERED STRUCTURAL ENGINEER

22/12/24

REGISTERED ENGINEER

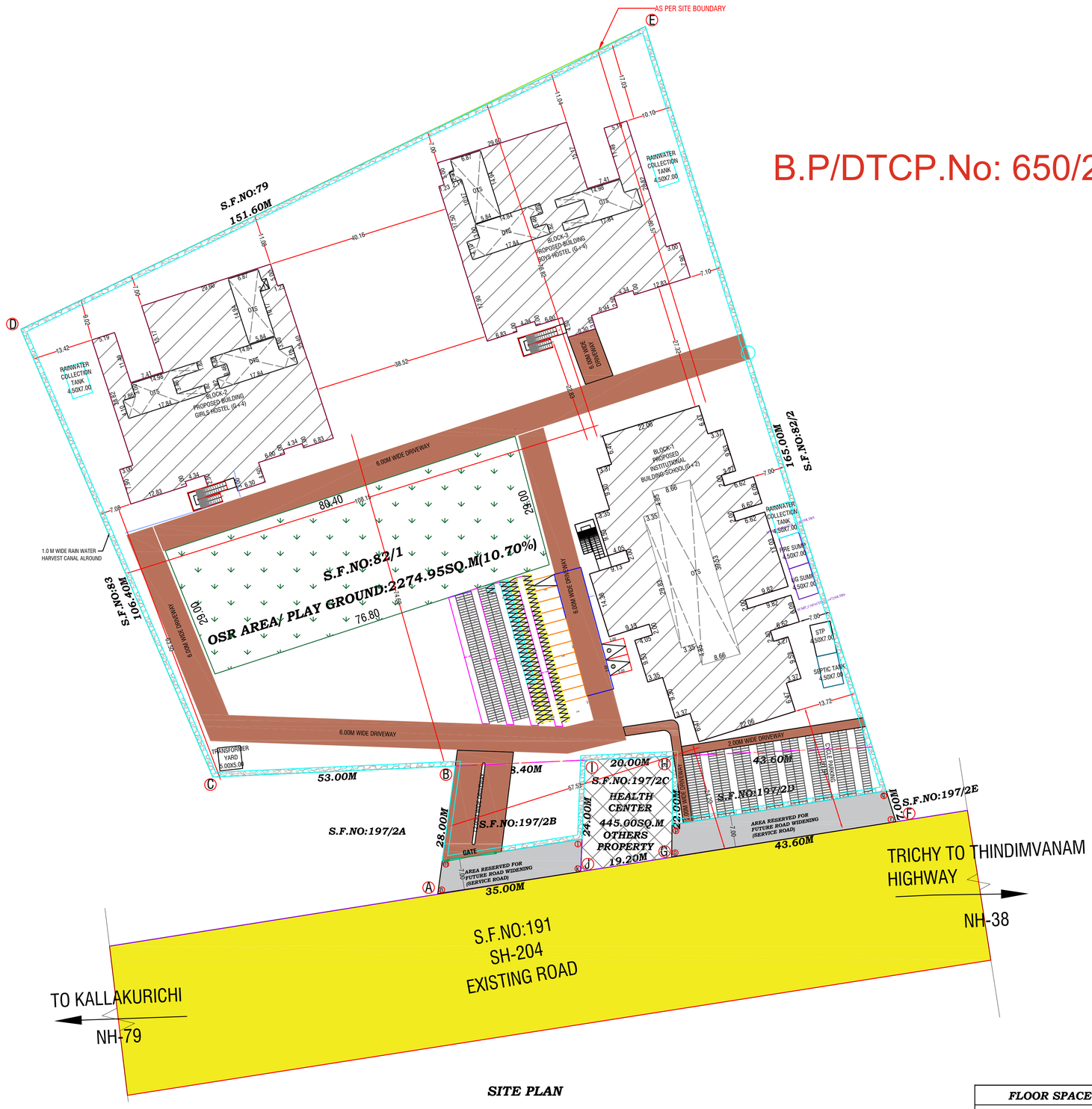

B.P/DTCP.No: 650/2025

SITE PLAN

ALL DIMENSIONS ARE IN METER	SCALE:- 1 : 500	SHEET NO : 5/20

SITE PLAN

SITE PLAN SHOWING THE PROPOSED R.C.C. ROOFED CONSTRUCTION OF THE EDUCATIONAL BUILDING IN S.F.NO:82/1 OF VADAPOONDI & 197/2B & 2D OF NAGALOOR VILLAGE, KALLAKURICHI TALUK , KALLAKURICHI DISTRICT.

APPLICANT :THE HEADMASTER(GOVERNMENT HIGHER SECONDARY SCHOOL)

AREA STATEMENT

VILLAGE	SF.No.	AREA AS PER ORDER COPY		
		IN Sq.M.	IN SFT.	IN HEC.
VADAPOONDI	82/1	19800.00	213125.40	1.98.00
NAGALOOR	197/2B	807.00	8686.47	0.08.07
	197/2D	850.00	9149.32	0.08.50
	TOTAL	21457.00	2230961.19	2.14.57
AS PER FMB		21222.47		

LEGEND

Block Name	Floor Name	Floor Area in Sq.m	Deduction Area in Sq.m	Total FSI Area in Sq.m	Total Non-FSI Area in Sq.m	Total Built up Area in Sq.m
Block-1 Proposed (School)	Ground Floor	2179.34	259.58	1919.76	-	1919.76
	First Floor	2179.34	290.35	1888.99	-	1888.99
	Second Floor	2110.15	290.53	1819.62	-	1819.62
	Terrace Floor	-	-	-	41.54	41.54
	TOTAL	6468.83	840.46	5628.37	41.54	5669.91
Block-2 Proposed (Girl's Hostel)	Ground Floor	1695.38	302.08	1393.30	-	1393.30
	First Floor	1568.65	207.55	1361.10	-	1361.10
	Second Floor	1568.65	207.55	1361.10	-	1361.10
	Third Floor	1568.65	207.55	1361.10	-	1361.10
	Fourth Floor	1568.65	207.55	1361.10	-	1361.10
	Terrace Floor	-	-	-	103.94	103.94
	TOTAL	7969.98	1132.28	6837.70	103.94	6941.64
Block-3 Proposed (Boy's Hostel)	Ground Floor	1695.38	302.08	1393.30	-	1393.30
	First Floor	1568.65	207.55	1361.10	-	1361.10
	Second Floor	1568.65	207.55	1361.10	-	1361.10
	Third Floor	1568.65	207.55	1361.10	-	1361.10
	Fourth Floor	1568.65	207.55	1361.10	-	1361.10
	Terrace Floor	-	-	-	103.94	103.94
	TOTAL	7969.98	1132.28	6837.70	103.94	6941.64
	GRAND TOTAL	22408.79	2759.10	19303.77	249.42	19553.19

PARKING DETAILS

TYPES OF VEHICLES PARKING	REQUIRED NO'S	PROVIDED NO'S
CYCLE PARKING	360	619
TWO WHEELER	36	75
DA TWO WHEELER PARKING	04	25
CAR	-	11
DA PARKING	02	02

COLOUR INDEX

- SITE BOUNDRY SHOWN
- PROPOSED BUILDING SHOWN
- EXISTING ROAD SHOWN
- DRIVEWAY SHOWN

PARKING CALCULATION

BLOCK-1-SCHOOL

Annexure – IV [Rule 13 (a)(B)] PAGE NO:88

NOTE:1 two-wheeler space for every 50sq.m of class room area or part there of and one cycle space for every 5sq.m of class room area or part thereof.

REQUIRED TWO WHEELER = 1 two wheeler for every 50sq.m = 1794.91/50 =35.89 say 36Nos

REQUIRED CYCLE = 1 cycle for every 5sq.m = 1794.91/5 =358.98say 360Nos

Class Room	No.of Class Room	Class Room Size	Area in sq.m
1-09,11-17&20-31	27	9.07X6.24	56.60
09-10 & 18-19	04	6.24X10.69	66.70
TOTAL	31	TOTAL	1794.91

BLOCK-2&3-HOSTELS

Annexure – IV [Rule 11] PAGE NO:88

NOTE: 1 Two Wheeler for every 10 rooms

REQUIRED TWO WHEELER = 1 two wheeler for every 10rooms = 106/10 =10.60 say 11Nos

REQUIRED DA TWO WHEELER =47/10 =0.47 say 1Nos

Annexure – IV [Part-2(B)] PAGE NO:91

For Buildings having more than 2 floors 10% of the required car/two wheelers parking spaces subject to minimum of 2 car spaces and 2 two-wheeler spaces shall be reserved for the physically handicapped persons near the entrance.

Hostels	No.of Room	Room Size	Area in sq.m
GIRLS	53	5.84X7.44	43.45
BOYS	53	5.84X7.44	43.45
TOTAL	106	TOTAL	9211.40

தலைமை ஆசிரியர்
கள்ளக்குறிச்சி மாவட்ட அரசு மாதிரி பள்ளி
கள்ளக்குறிச்சி - 606 202.

APPLICANT

20/12/24

REGISTERED ENGINEER

20/12/24

REGISTERED STRUCTURAL ENGINEER

FLOOR SPACE INDEX (F.S.I)

$$\frac{\text{TOTAL COVERED AREA}}{\text{PLOT AREA}} = \frac{19303.77}{21222.47} = 0.9095 < 2.00$$

PLOT COVERAGE (P.C)

$$\frac{\text{TOTAL GF AREA}}{\text{PLOT AREA}} \times 100 = \frac{4699.66}{21222.47} \times 100$$

$$= 22.14\% < 50\%$$

THE LANDLENS SUITE

Eight ways to know a piece of land before you pay for it.

This report covers one part of the picture. These cover the rest, drawn from the same government records, for any property in Tamil Nadu.

LandLens One
Ask anything about a property and get an answer grounded in live government records, with the sources shown.
/landlens/one

Verify My Land
Every record check run on one property and returned as a single report.
/landlens/verify-my-land

Legal Opinion
An advocate's written opinion on the title, built on the records we pull for it.
/landlens

One Map
Every layer on one map: the parcel, its boundary, zoning, water bodies and what sits around it.
/landlens/one/map

PriceMap
What land actually changed hands for around this plot, taken from the registered deeds.
/landlens/pricemap

Build Scope
What you are allowed to build here: floor space, height, coverage and setbacks.
/landlens/build-scope

Property Tracker
Watch a property and hear about it when something new is registered against it.
/landlens/property-tracker

Deal Room
Run the transaction in one place: documents, stamping, signatures and the parties.
/landlens/deal-room

hello@verified.realestate · +91 9996 12 9996

FREE TOOLS · NO ACCOUNT NEEDED

Twenty-four checks you can run yourself, at no cost.

Records and verification

The registers themselves, read for you.

- Encumbrance Certificate
- Patta and Chitta
- Field Measurement Sketch
- EC Analyzer
- Bank charge check
- Court case search
- Seller background check
- Approval check by survey

Value and duty

What it is worth and what it costs to register.

- Guideline value by street
- Guideline value by survey
- Stamp duty and registration fees
- Capital gains
- Floor space index
- Area unit converter

Zoning and land use

What the plan says can happen on this land.

- Land use zone finder
- CMDA land use check
- Coastal regulation zone
- Master plan check
- Water bodies finder
- Airport height clearance

Registers and directories

Who holds it, and which office keeps the record.

- Find your registering office
- Temple property check
- Waqf property check
- RERA register

Every free tool
/tools

Services we run for you
/services

The LandLens suite
/landlens/one

Verified RealEstate™

Every claim in this document traces back to a government record.

- Legal opinions, due diligence and title verification
- Building plan, layout and sub-division approvals
- Completion and occupancy certificates, regularisation
- Escrow, negotiation and NRI property management
- Land survey, soil testing, architecture and construction

Verified RealEstate
3/350/2 Mettukuppam,
OMR Thoraipakkam,
Chennai 600 097, India
hello@verified.realestate
+91 9996 12 9996

Prepared from the registers named on the page each finding sits on. Where a register could not be read, this document says so in its place rather than leaving the gap to be read as a clean result.