Verified RealEstate™

REFERENCE
052/2025-2026

ISSUED
23 March 2026

PP APPROVAL RECORD

Planning Permission

Kancheepuram district, Tamil Nadu

APPROVAL TYPE
Building Plan

ISSUING AUTHORITY
Rural Panchayat

The approval as the planning authority issued it, reproduced in full behind this page.

An approval speaks to what was sanctioned, not to what was built. Completion is a separate record.

Verified RealEstate™
3/350/2 Mettukuppam,
OMR Thoraipakkam,
Chennai 600 097, India

hello@verified.realestate
+91 9996 12 9996
verified.realestate

DIGITALLY VERIFIED RECORD

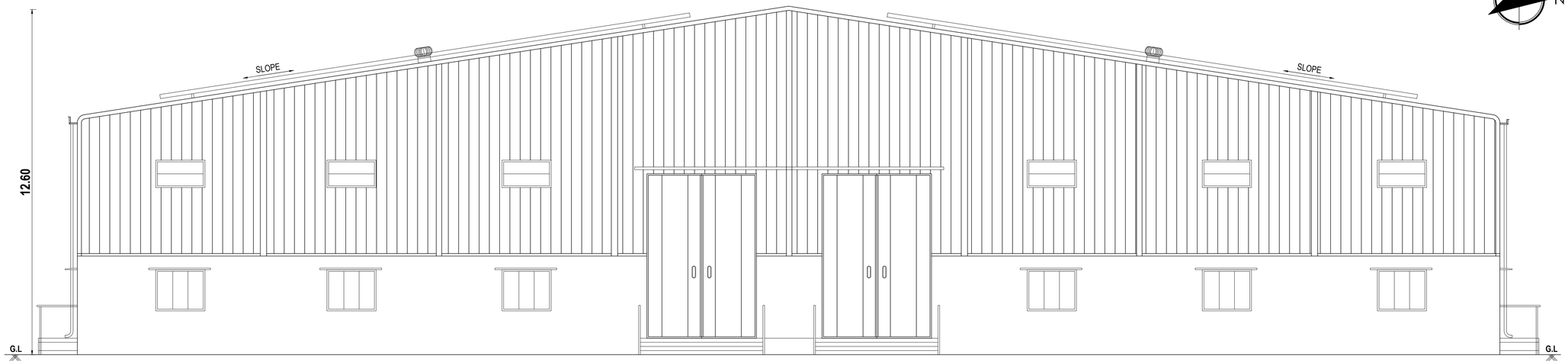

FRONT ELEVATION

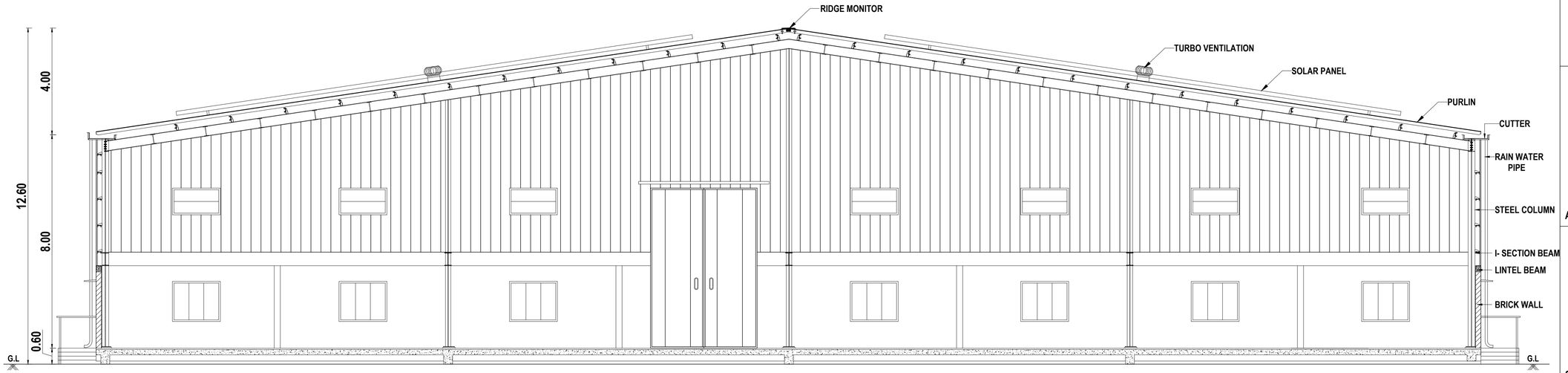

CROSS SECTION - A. A'

SCALE- 1: 100 SHEET-3 OF 3

PLAN SHOWING THE PROPOSED CONSTRUCTION OF INDUSTRIAL BUILDING IN S.NO:228/1A2, 1B1, 1B2, 1B3A, 1B3B, 1B4, 1B5, 1B6A & 1B6B OF PANRUTTI-A VILLAGE AND PANCHAYAT, SRIPERUMBUDUR PANCHAYAT UNION & TALUK, KANCHEEPURAM DISTRICT.

SCHEDULE OF JOINERY

TYPE	DESCRIPTION	SIZE
HD	HYDRAULIC DOOR	4.00 x 6.00
D	DOOR	1.20 x 2.20
D1	DOOR - 1	0.90 x 2.20
SD	SLID DOOR	0.90 x 2.20
W/V	WINDOW / VENTILATOR	1.80 x 1.50
W	WINDOW	1.50 x 1.20
V	VENTILATOR	0.90 x 0.60

ALL DIMENSIONS ARE IN METER

NOTE: ALL ROOM MECHANICAL VENTILATION PROVIDE

APPLICANT SIGNATURE :-

Dr. M. SEKAR, M.E.,Ph.D.,
(MISTE, ISET),
REG. STRUCTURAL ENGINEER, GRADE-I,
DTCP. Reg. No. SE/Gr.-I/003/2021
PLOT No. 28, Kottaiperumal Koil Street,
KAVERIPAKKAM - 6 2 508.
Ranipet Dt. TamilNadu. India.
Mobile: + 91-9498314532 / 9543144287

STRUCTURAL ENGINEER :-

Er.S.RAVIPRASAD,B.E.,
Registered Engineer Grade-II (RE)
Reg No.CGLDIST/RE/Gr-II/2025/05/005
No.3.First Floor, Periyasengunthar Street,
Uthiramerur-603406 Mob:7010896100

REGISTERED ENGINEER :-

SCALE- 1: 100 | SHEET-2 OF 3

PLAN SHOWING THE PROPOSED CONSTRUCTION OF INDUSTRIAL BUILDING IN S.NO:228/1A2, 1B1, 1B2, 1B3A, 1B3B, 1B4, 1B5, 1B6A & 1B6B OF PANRUTTI-A VILLAGE AND PANCHAYAT, SRIPERUMBUDUR PANCHAYAT UNION & TALUK, KANCHEEPURAM DISTRICT.

SL.NO	DESCRIPTION	FSI AREA. SQ.M	NON FSI AREA. SQ.M	TOTAL BUILD-UP AREA. SQ.M
1.	INDUSTRIAL BUILDING GROUND FLOOR	1872.00	-	1872.00
	CANOPY	33.90	-	33.90
2.	SECURITY ROOM	-	6.25	6.25

SCHEDULE OF JOINERY

TYPE	DESCRIPTION	SIZE
HD	HYDRAULIC DOOR	4.00 x 6.00
D	DOOR	1.20 x 2.20
D1	DOOR - 1	0.90 x 2.20
SD	SLID DOOR	0.90 x 2.20
W/V	WINDOW / VENTILATOR	1.80 x 1.50
W	WINDOW	1.50 x 1.20
V	VENTILATOR	0.90 x 0.60

MACHINERY DETAILS

REF	NAME OF THE MACHINERY	QUTY	HP
1.	SURFACE GRIND	1 x 1	5.36
2.	ROD CUTTER	1 x 1	2.68
3.	CENTER CORRECTION	1 x 1	8.46
4.	WHEEL DRESSING	1 x 1	20.10
5.	WAIDHA	1 x 1	13.40

ALL DIMENSIONS ARE IN METER

NOTE: ALL ROOM MECHANICAL VENTILATION PROVIDE

FOUNDATION	:	COLUMN FOOTING OVER PCC AND SAND RC FOOTING OVER 150 THK PCC OVER 150 THK SAND
SUPER STRUCTURE	:	BRICK WORKS IN CM 1:5 LINTELS, BEAMS IN RCC 1:2:4
FLOORING	:	PCC FLOORING FINISHED
PLASTERING	:	INTERIOR WITH CM 1:4 EXTERIOR WITH CM1:5
ROOFING	:	PURLING ROOF SHEET
PANITING	:	3 COATS OF DISTEMPER FOR INNER WALLS
WINDOW	:	UPVC WINDOW

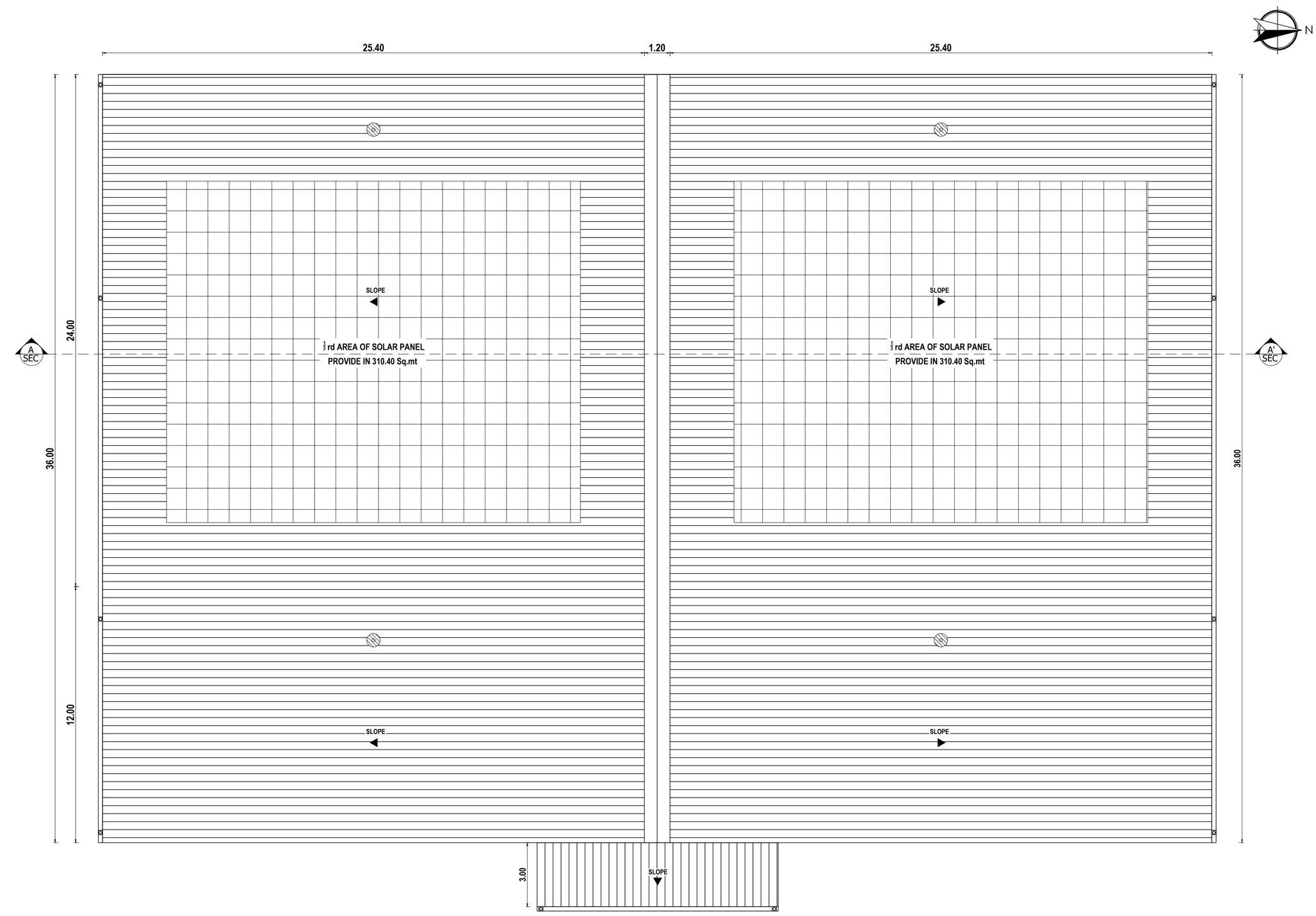

PROPOSED ROOF PLAN

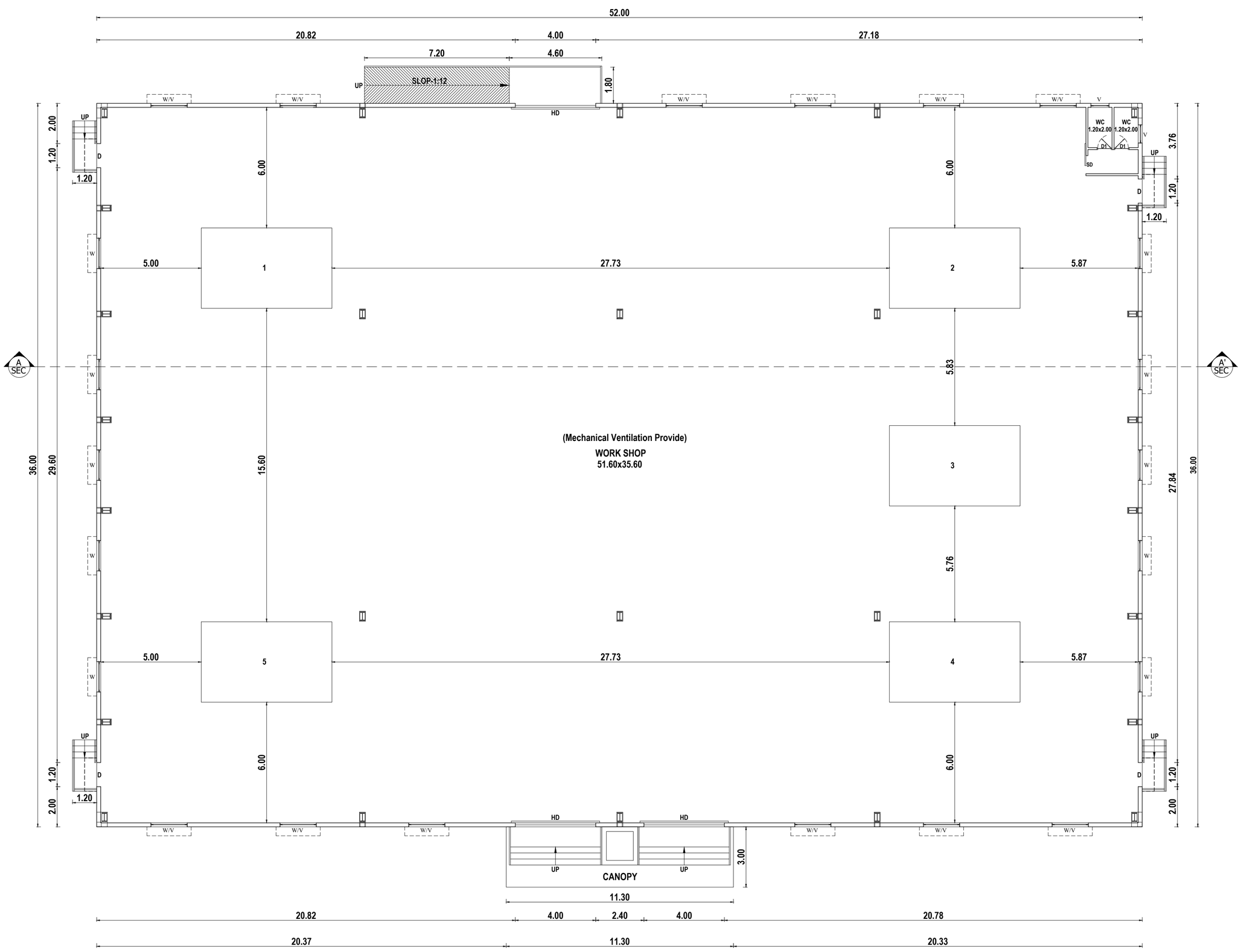

PROPOSED GROUND FLOOR PLAN

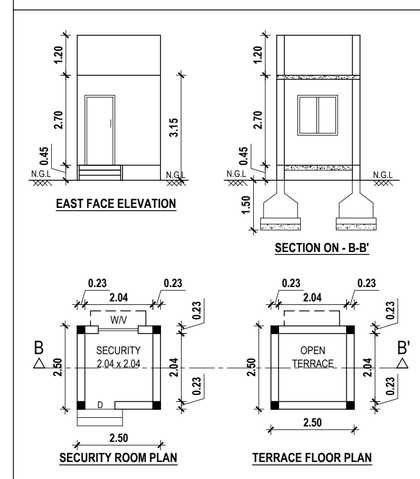

APPLICANT SIGNATURE :-

Dr. M. SEKAR, M.E.,Ph.D.,
(MISTE, ISET),
REG. STRUCTURAL ENGINEER, GRADE-I,
DTCP, Reg. No. SE/Gr.-I/003/2021
PLOT No. 28, Kottaiperumal Koil Street,
KAVERIPAKKAM - 6 2 508.
Ranipet Dt. TamilNadu. India.
Mobile: + 91-9498314532 / 9545144287

STRUCTURAL ENGINEER :-

Er.S.RAVIPRASAD,B.E.,
Registered Engineer Grade-II (RE)
Reg No.CGLDIST/RE/Gr-II/2025/05/005
No.3,First Floor, Periyasengunthar Street,
Uthiramerur-603406 Mob:7010896100

REGISTERED ENGINEER :-

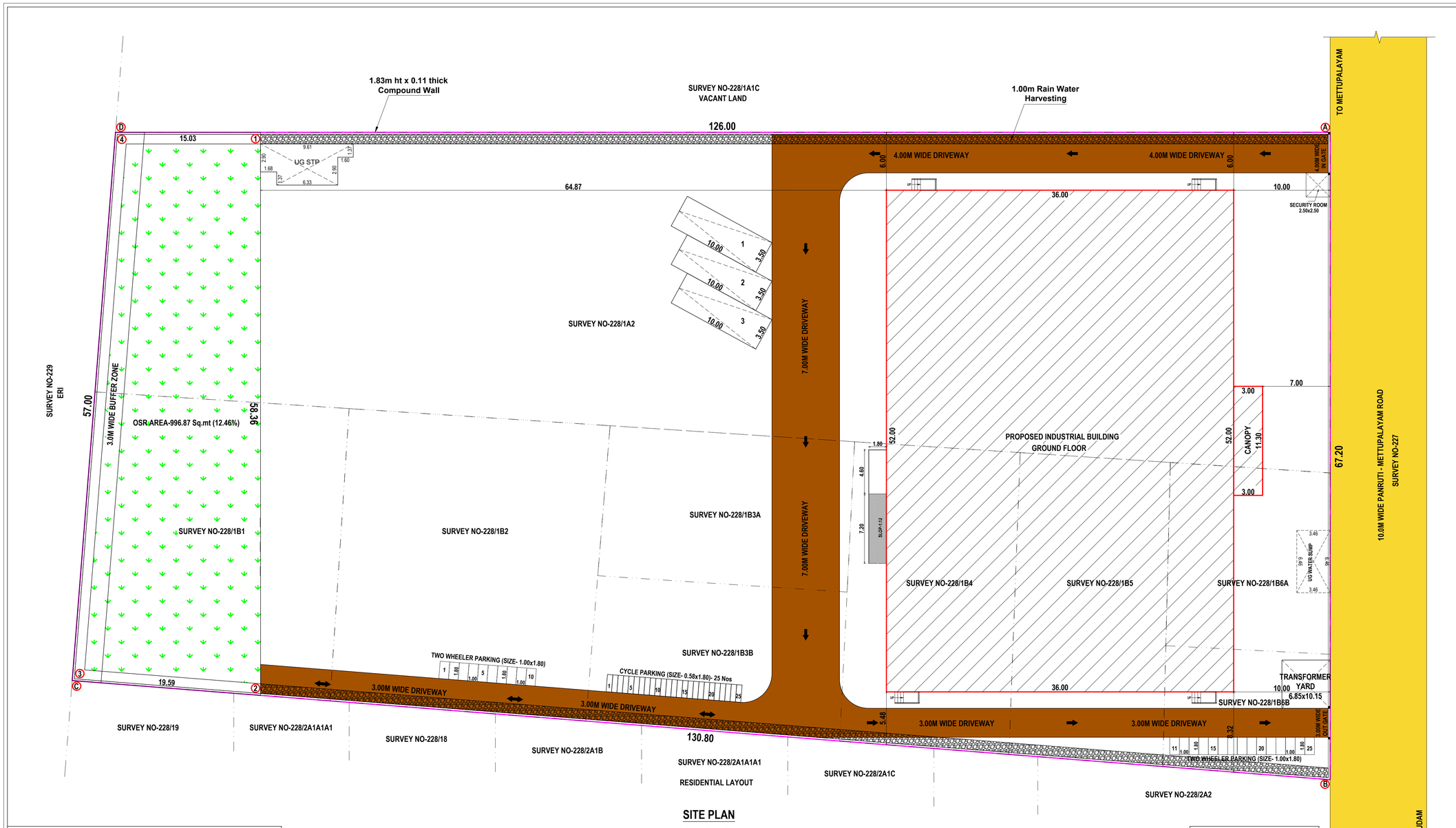

SITE PLAN
SCALE-1:200

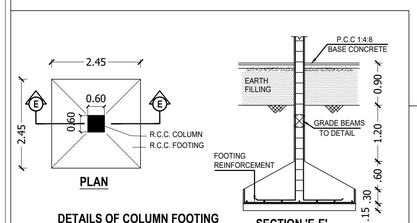

DETAILS OF COLUMN FOOTING

SECTION 'E-E'

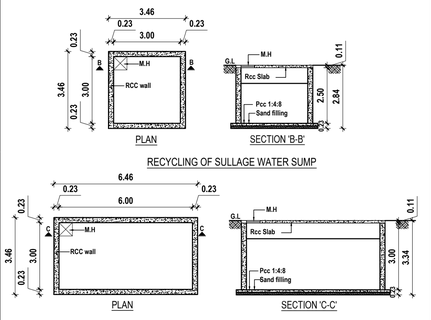

RECYCLING OF SULLAGE WATER SUMP

U.G.SUMP FOR DRINKING WATER

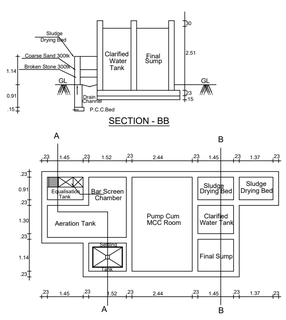

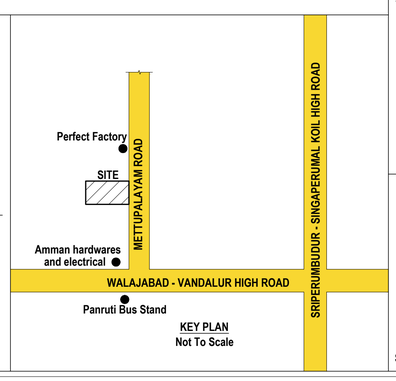

KEY PLAN
Not To Scale

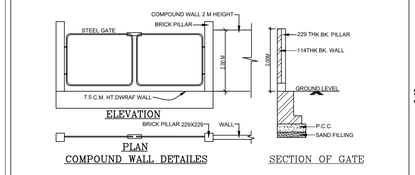

COMPOUND WALL DETAILES

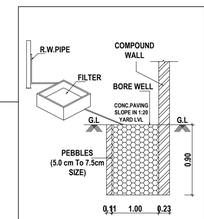

RAIN WATER TRENCH

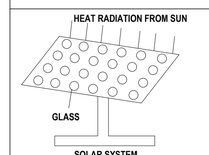

SOLAR SYSTEM

SCALE- 1:200	SITE PLAN	SHEET. 1 OF 3

PLAN SHOWING THE PROPOSED CONSTRUCTION OF INDUSTRIAL BUILDING IN S.NO:228/1A2, 1B1, 1B2, 1B3A, 1B3B, 1B4, 1B5, 1B6A & 1B6B OF PANRUTTI-A VILLAGE AND PANCHAYAT, SRIPERUMBUDUR PANCHAYAT UNION & TALUK, KANCHEEPURAM DISTRICT.

MANUFACTURE DETAILS: As Per TNCD&BR Amendment G.O.(Ms). No.154 H&UDD Dated:07.10.2025 Annexure VII, SL.NO.17, Aluminium & Copper Extraction From Scrap Using Oil Fired Furnace (Dry Process Only)

CATEGORY OF INDUSTRY :ORANGE CATEGORY.

AS PER DOCUMENT EXTENT - 1.97 Acre / 7972.19 Sq.mt

AS PER PATTA EXTENT - 8000.00 Sq.mt

OSR - 996.87 Sq.mt - (12.46 %)

AREA STATEMENT OF THE PROPOSED BUILDING DETAIL :-

SL.NO	DESCRIPTION	FSI AREA. SQ.M	NON FSI AREA. SQ.M	TOTAL BUILD-UP AREA. SQ.M
1.	PRO. INDUSTRIAL BUILDING GROUND FLOOR	1872.00	-	1872.00
	CANOPY	33.90	-	33.90
2.	SECURITY ROOM	-	6.25	-
3.	TRANSFORMER YARD	-	25.00	25.00
4.	UG SUMP	-	38.40	38.40
5.	SEWAGE TREATMENT PLANT	-	22.35	22.35
	TOTAL EXTENT	1905.90	92.00	1997.90

Floor Space Index :- 1905.90 / 7972.19 FSI ARCHIVED = 0.239

PARKING DETAILS:

PARKING DESCRIPTION	REQUIRED	PROVIDED
Lorry Parking- Workshop Area Area/750 = 1872.00/750 = 2.496	03 Nos	03 Nos
Two Wheelers Parking- Workshop Area Area/75 = 1872.00/75 = 24.96	25 Nos	25 Nos
Cycle Parking- Workshop Area Area/75 = 1872.00/75 = 24.96	25 Nos	25 Nos

SANITARY REQUIREMENTS AS PER TNCBDR-2019

DESCRIPTION	REQUIRED	PROVIDED
WATER CLOSET (Male- 3 For 36-65 Nos)	01	02
ABLUTION TAPS (One In Each W.C)	01	02
URINAL (Male- 2 For 21-45 Nos)	02	02
WASH TAPS (One For Every 25 Nos)	01	02
DRINKER WATER FOUNTAINS (One For Every 100 Nos)	01	01

SCHEDULE OF JOINERY

TYPE	DESCRIPTION	SIZE
HD	HYDRAULIC DOOR	3.00 x 3.00
D	DOOR	3.00 x 3.00
D1	DOOR - 1	0.90 x 2.20
SD	SLID DOOR	1.22 x 0.75
W/V	WINDOW / VENTILATOR	1.80 x 1.50
W	WINDOW	1.50 x 1.20
V	VENTILATOR	0.90 x 0.60

N

MACHINERY DETAILS

REF	NAME OF THE MACHINERY	QUTY	HP
1.	SURFACE GRIND	1 x 1	5.36
2.	ROD CUTTER	1 x 1	2.68
3.	CENTER CORRECTION	1 x 1	8.46
4.	WHEEL DRESSING	1 x 1	20.10
5.	WAIDHA	1 x 1	13.40

TOTAL HOSE POWER = 50.0

COLOUR INDEX:

- SITE BOUNDARY
- BUILDING BOUNDARY
- DRIVEWAY
- OSR AREA
- EXISTING ROAD

PROPOSED NOS OF WORKERS - 25, (Male - 25 Nos).

ALL DIMENSIONS ARE IN METER

NOTE: ALL ROOM MECHANICAL VENTILATION PROVIDE

APPLICANT SIGNATURE :-

Dr. M. SEKAR, M.E.,Ph.D.,
(MISTE, ISET),
REG. STRUCTURAL ENGINEER, GRADE-I,
DTCP. Reg No. SE/Gr.-I/003/2021
PLOT No. 28, Kottaiperumal Koil Street,
KAVERIPAKKAM - 2 508.
Ranipet Dt. TamilNadu India.
Mobile: + 91-9498314532 / 9545144287

STRUCTURAL ENGINEER :-

Er.S.RAVIPRASAD,B.E.,
Registered Engineer Grade-II (RE)
Reg No.CGLDIST/RE/Gr-II/2025/05/005
No.3,First Floor, Periyasenguntha Street,
Uthiramerur-603406 Mob:7010896100

REGISTERED ENGINEER :-

THE LANDLENS SUITE

Eight ways to know a piece of land before you pay for it.

This report covers one part of the picture. These cover the rest, drawn from the same government records, for any property in Tamil Nadu.

LandLens One
Ask anything about a property and get an answer grounded in live government records, with the sources shown.
/landlens/one

Verify My Land
Every record check run on one property and returned as a single report.
/landlens/verify-my-land

Legal Opinion
An advocate's written opinion on the title, built on the records we pull for it.
/landlens

One Map
Every layer on one map: the parcel, its boundary, zoning, water bodies and what sits around it.
/landlens/one/map

PriceMap
What land actually changed hands for around this plot, taken from the registered deeds.
/landlens/pricemap

Build Scope
What you are allowed to build here: floor space, height, coverage and setbacks.
/landlens/build-scope

Property Tracker
Watch a property and hear about it when something new is registered against it.
/landlens/property-tracker

Deal Room
Run the transaction in one place: documents, stamping, signatures and the parties.
/landlens/deal-room

hello@verified.realestate · +91 9996 12 9996

FREE TOOLS · NO ACCOUNT NEEDED

Twenty-four checks you can run yourself, at no cost.

Records and verification

The registers themselves, read for you.

- Encumbrance Certificate
- Patta and Chitta
- Field Measurement Sketch
- EC Analyzer
- Bank charge check
- Court case search
- Seller background check
- Approval check by survey

Value and duty

What it is worth and what it costs to register.

- Guideline value by street
- Guideline value by survey
- Stamp duty and registration fees
- Capital gains
- Floor space index
- Area unit converter

Zoning and land use

What the plan says can happen on this land.

- Land use zone finder
- CMDA land use check
- Coastal regulation zone
- Master plan check
- Water bodies finder
- Airport height clearance

Registers and directories

Who holds it, and which office keeps the record.

- Find your registering office
- Temple property check
- Waqf property check
- RERA register

Every free tool
/tools

Services we run for you
/services

The LandLens suite
/landlens/one

Verified RealEstate™

Every claim in this document traces back to a government record.

- Legal opinions, due diligence and title verification
- Building plan, layout and sub-division approvals
- Completion and occupancy certificates, regularisation
- Escrow, negotiation and NRI property management
- Land survey, soil testing, architecture and construction

Verified RealEstate
3/350/2 Mettukuppam,
OMR Thoraipakkam,
Chennai 600 097, India
hello@verified.realestate
+91 9996 12 9996

Prepared from the registers named on the page each finding sits on. Where a register could not be read, this document says so in its place rather than leaving the gap to be read as a clean result.