Verified RealEstate™

REFERENCE
17/2024

ISSUED
27 June 2024

PP APPROVAL RECORD

Planning Permission

Kanniyakumari district, Tamil Nadu

APPROVAL TYPE
Building Plan

ISSUING AUTHORITY
Rural Panchayat

The approval as the planning authority issued it, reproduced in full behind this page.

An approval speaks to what was sanctioned, not to what was built. Completion is a separate record.

Verified RealEstate™
3/350/2 Mettukuppam,
OMR Thoraipakkam,
Chennai 600 097, India

hello@verified.realestate
+91 9996 12 9996
verified.realestate

DIGITALLY VERIFIED RECORD

PLAN SHOWING THE PROPOSED CONSTRUCTION OF RESIDENTIAL BUILDING,

IN Re.Sy.No: 326/6A1, OF THIRUPATHISARAM VILLAGE, AT 2ND STREET,

ANNAI NAGAR, BEEMANAGARI, BEEMANAGARI VILLAGE PANCHAYAT.

Name of owner:- T. JOSHUA, S/o Theivanayagam.

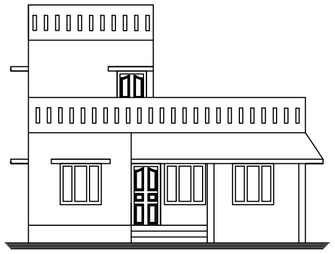

FRONT ELEVATION

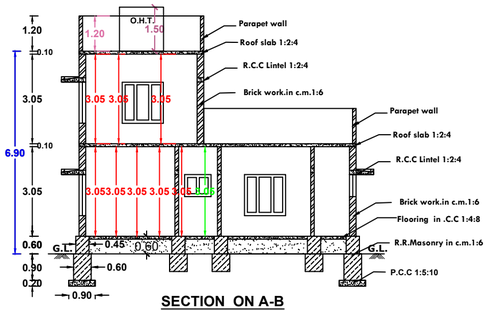

SECTION ON A-B

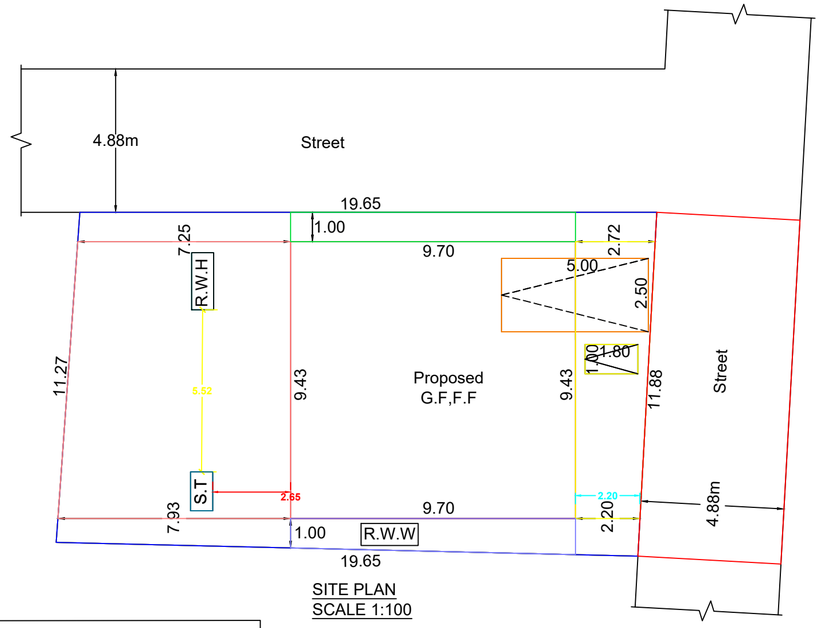

SITE PLAN
SCALE 1:100

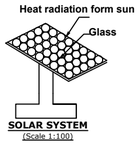

SOLAR SYSTEM
(Scale 1:100)

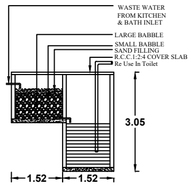

RECYCLING OF WASTE WATER
FROM KITCHEN & BATHROOM

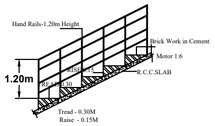

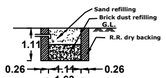

DETAILS OF RAIN WATER
HARVESTING

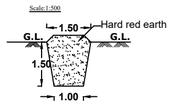

TRIAL PIT
(Scale 1:100)

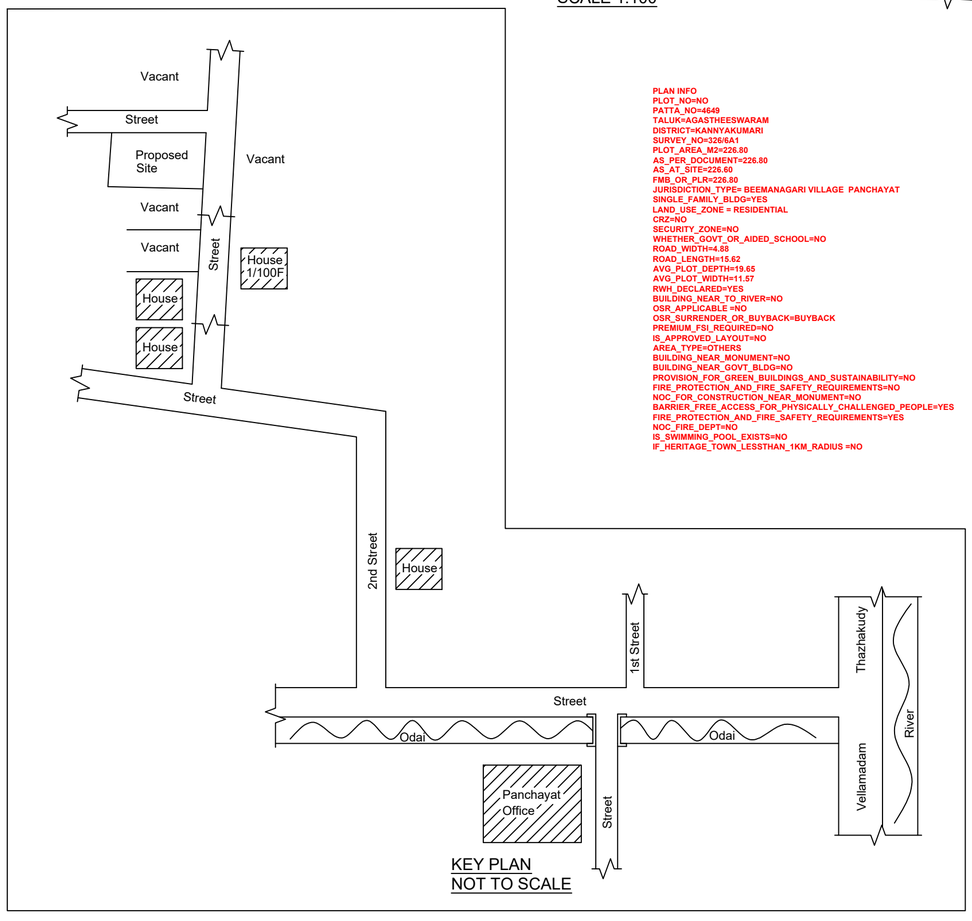

KEY PLAN
NOT TO SCALE

PLAN INFO
PLOT_NO=NO
PATTA_NO=4649
TALUK=AGASTHEESWARAM
DISTRICT=KANNYAKUMARI
SURVEY_NO=326/6A1
PLOT_AREA_M2=226.80
AS_PER_DOCUMENT=226.80
AS_AT_SITE=226.60
FMB_OR_PLR=226.80
JURISDICTION_TYPE= BEEMANAGARI VILLAGE PANCHAYAT
SINGLE_FAMILY_BLDG=YES
LAND_USE_ZONE = RESIDENTIAL
CRZ=NO
SECURITY_ZONE=NO
WHETHER_GOVT_OR_AIDED_SCHOOL=NO
ROAD_WIDTH=4.88
ROAD_LENGTH=15.62
AVG_PLOT_DEPTH=19.65
AVG_PLOT_WIDTH=11.57
RWH_DECLARED=YES
BUILDING_NEAR_TO_RIVER=NO
OSR_APPLICABLE =NO
OSR_SURRENDER_OR_BUYBACK=BUYBACK
PREMIUM_FSI_REQUIRED=NO
IS_APPROVED_LAYOUT=NO
AREA_TYPE=OTHERS
BUILDING_NEAR_MONUMENT=NO
BUILDING_NEAR_GOVT_BLDG=NO
PROVISION_FOR_GREEN_BUILDINGS_AND_SUSTAINABILITY=NO
FIRE_PROTECTION_AND_FIRE_SAFETY_REQUIREMENTS=NO
NOC_FOR_CONSTRUCTION_NEAR_MONUMENT=NO
BARRIER_FREE_ACCESS_FOR_PHYSICALLY_CHALLENGED_PEOPLE=YES
FIRE_PROTECTION_AND_FIRE_SAFETY_REQUIREMENTS=YES
NOC_FIRE_DEPT=NO
IS_SWIMMING_POOL_EXISTS=NO
IF_HERITAGE_TOWN_LESSTHAN_1KM_RADIUS =NO

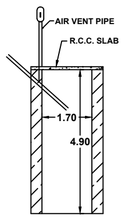

SOAK PIT

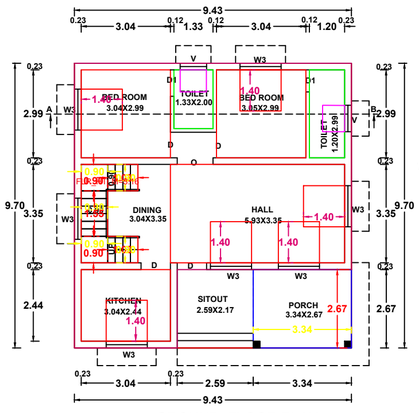

GROUND FLOOR PLAN

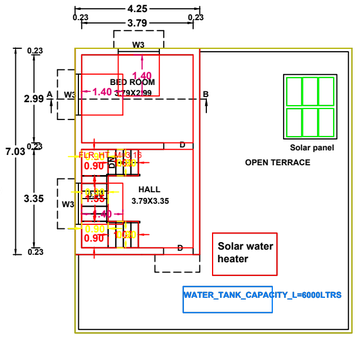

FIRST FLOOR PLAN

ALL DIMENSIONS ARE IN METER
PLAN SCALE 1:100

CERTIFIED THAT PROVISIONS SHALL BE MADE TO "RAIN WATER HARVESTING " ARRANGEMENTS SYSTEM IN THE PROPOSED CONSTRUCTION

REFERENCE

D-DOOR	--	1.00X2.10
D1-DOOR	--	0.75X2.10
W3-WINDOW	--	1.40X1.40
V-VENTILATOR	--	0.90X0.60

AREA OF SITE	: 226.80.sq.m(2441.sq.ft)
AREA OF PROPOSED	
GROUND FLOOR	: 91.47.sq.m (984.sq.ft)
FIRST FLOOR	: 29.88.sq.m (321.sq.ft)
TOTAL AREA	: 121.35.sq.m (1306.sq.ft)
AREA OF VACANT	: 135.33.sq.m (1456.sq.ft)
ROAD	
EXISTING	

PARKING CALCULATION
PROPOSED BUILDING

GROUND FLOOR (Kitchen-1)	=	91.47.Sq.m (984.Sq.ft)
FIRST FLOOR	=	29.88.Sq.m (321.Sq.ft)
TOTAL AREA	=	121.35.Sq.m (1306.Sq.ft)
First 75.sq.m	=	Nil
Next 46.35.sq.m		1 Car Space
		1 Two Wheeler Space

PLOT COVERAGE = $\frac{91.47 \times 100}{226.80}$ =40.33%

F.S.I.= $\frac{121.35}{226.80}$ = 0.53 < 2.0

SIGNATURE OF LAND AND BUILDING OWNER

S. RAMU
Registered Engineer Gr - III
Reg. No. 150/LS/2020/00002
S.M.S. Engineering Construction
90,1st Floor, Alexandra Press Road,
Nagercoil - 1,
Ph : 9443275554, 9843375554.

SIGNATURE OF LICENCE SURVEYOR/ENGINEER

S.M.S. CONSTRUCTION
90.First floor, s.m.s.building
Alexandra press road
Nagercoil

cell.9443275554	Drawn by.C.G. Sherlin Jerfia.	
9843375554	Checked by.S.Ramu.	
Date:22.03.2024	Size: A1(5-2)	gmail: smsramungl@gmail.com 081

THE LANDLENS SUITE

Eight ways to know a piece of land before you pay for it.

This report covers one part of the picture. These cover the rest, drawn from the same government records, for any property in Tamil Nadu.

LandLens One
Ask anything about a property and get an answer grounded in live government records, with the sources shown.
/landlens/one

Verify My Land
Every record check run on one property and returned as a single report.
/landlens/verify-my-land

Legal Opinion
An advocate's written opinion on the title, built on the records we pull for it.
/landlens

One Map
Every layer on one map: the parcel, its boundary, zoning, water bodies and what sits around it.
/landlens/one/map

PriceMap
What land actually changed hands for around this plot, taken from the registered deeds.
/landlens/pricemap

Build Scope
What you are allowed to build here: floor space, height, coverage and setbacks.
/landlens/build-scope

Property Tracker
Watch a property and hear about it when something new is registered against it.
/landlens/property-tracker

Deal Room
Run the transaction in one place: documents, stamping, signatures and the parties.
/landlens/deal-room

hello@verified.realestate · +91 9996 12 9996

FREE TOOLS · NO ACCOUNT NEEDED

Twenty-four checks you can run yourself, at no cost.

Records and verification

The registers themselves, read for you.

- Encumbrance Certificate
- Patta and Chitta
- Field Measurement Sketch
- EC Analyzer
- Bank charge check
- Court case search
- Seller background check
- Approval check by survey

Value and duty

What it is worth and what it costs to register.

- Guideline value by street
- Guideline value by survey
- Stamp duty and registration fees
- Capital gains
- Floor space index
- Area unit converter

Zoning and land use

What the plan says can happen on this land.

- Land use zone finder
- CMDA land use check
- Coastal regulation zone
- Master plan check
- Water bodies finder
- Airport height clearance

Registers and directories

Who holds it, and which office keeps the record.

- Find your registering office
- Temple property check
- Waqf property check
- RERA register

Every free tool
/tools

Services we run for you
/services

The LandLens suite
/landlens/one

Verified RealEstate™

Every claim in this document traces back to a government record.

- Legal opinions, due diligence and title verification
- Building plan, layout and sub-division approvals
- Completion and occupancy certificates, regularisation
- Escrow, negotiation and NRI property management
- Land survey, soil testing, architecture and construction

Verified RealEstate
3/350/2 Mettukuppam,
OMR Thoraipakkam,
Chennai 600 097, India
hello@verified.realestate
+91 9996 12 9996

Prepared from the registers named on the page each finding sits on. Where a register could not be read, this document says so in its place rather than leaving the gap to be read as a clean result.