Verified RealEstate™

REFERENCE
37/03.10.2025

ISSUED
03 October 2025

PP APPROVAL RECORD

Planning Permission

Kanniyakumari district, Tamil Nadu

APPROVAL TYPE
Building Plan

ISSUING AUTHORITY
Rural Panchayat

The approval as the planning authority issued it, reproduced in full behind this page.

An approval speaks to what was sanctioned, not to what was built. Completion is a separate record.

Verified RealEstate™
3/350/2 Mettukuppam,
OMR Thoraipakkam,
Chennai 600 097, India

hello@verified.realestate
+91 9996 12 9996
verified.realestate

DIGITALLY VERIFIED RECORD

PLAN SHOWING THE PROPOSED CONSTRUCTION OF RESIDENTAL TERRACE ROOF BUILDING IN RE.SY NO: 550/14, ATHENCODE VILLAGE, METHUKUMMAL VILLAGE PANCHAYAT, KILLIYOOR TALUK, K.K.DIST.

CONSTRUCTION ADDRESS :
Mr. AJITH.S,
S/O Mr. SUTHARSANAN,
NILLAVETTI VILAI VEEDU,
KAMARAJ NAGER,
PADANTHALUMOODU POST,
K.K.DISTRICT.

PARKING CALCULATION ACCORDING TO TNCDBR 2019 PLINTH AREA ABOVE 75 Sq.Mt.-1 Car	
TOTAL PLINTH AREA OF BUILDING	107.60 Sq.Mt.
No. of Car	107.60/75=1.43 Car

REFERENCE

DOORS D1. :1.00 x 2.10.
D2. :0.90 X 2.10
WINDWS W :1.50 X 1.50
W1 :1.00 X 1.50
VENTILATOR V. :0.90 x 0.80.

AREA DETAILS - BUILDING		
PLINTH AREA		
Ground Floor	70.96 Sq.m	763.81 Sq.ft
First Floor	37.73 Sq.m	406.13 Sq.ft
Total	108.69 Sq.mt	1169.94 Sq.ft
FLOOR AREA		
Ground Floor	58.21 Sq.m	626.57 Sq.ft
First Floor	30.08 Sq.m	323.78 Sq.ft
Total	88.29 Sq.mt	950.35 Sq.ft
AREA DETAILS - PLOT		
Site Area	7.300 Cents	2.96 Are
	(295.431 Sq.m)	(3179.88 Sq.ft)
Vacant Area	224.47 Sq.m	2416.21 Sq.ft
F.S.I	108.69 / 295.43	0.37 < 2.00
PC	70.96 / 295.43	24.02 < 50

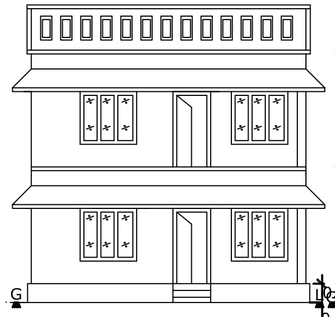

ELEVATION

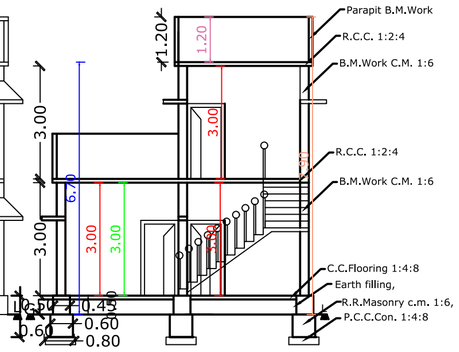

SECTION ON AA

KEY PLAN

SCALE 1: 100

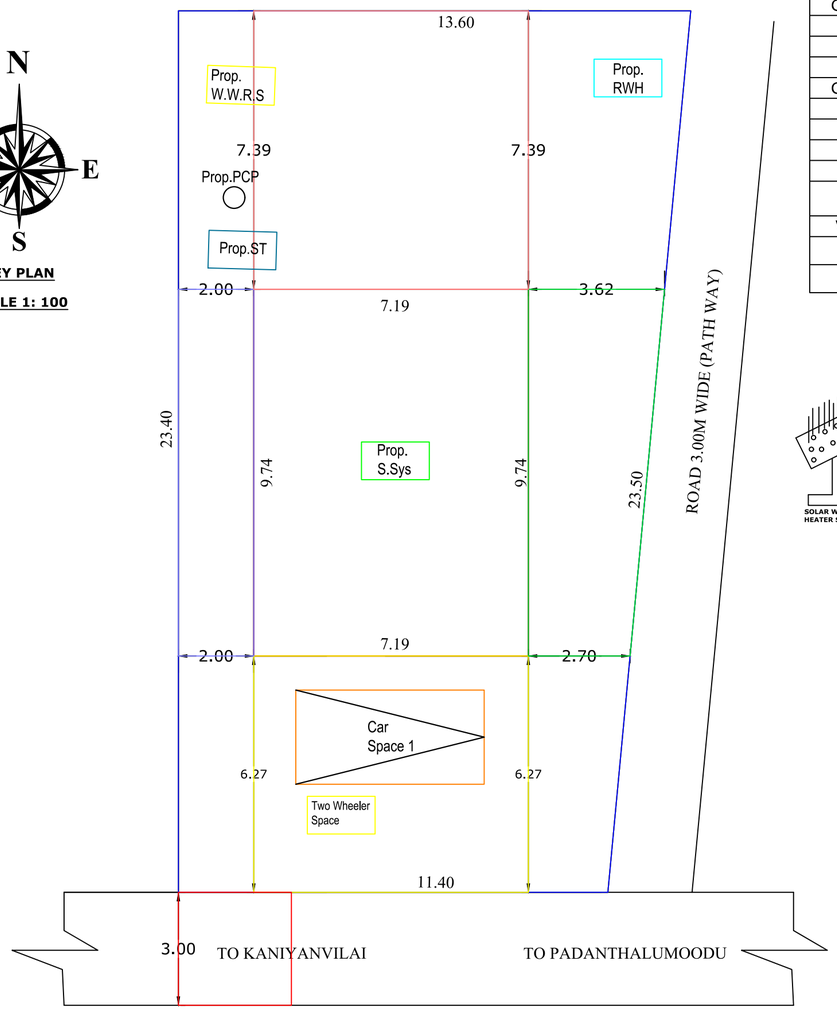

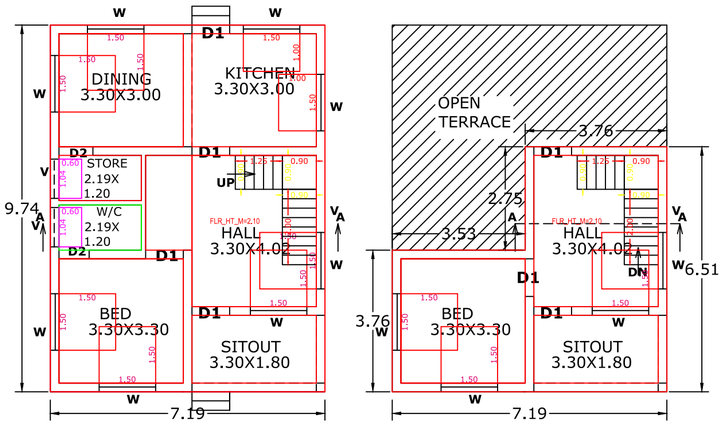

G.F.PLAN F.F.PLAN

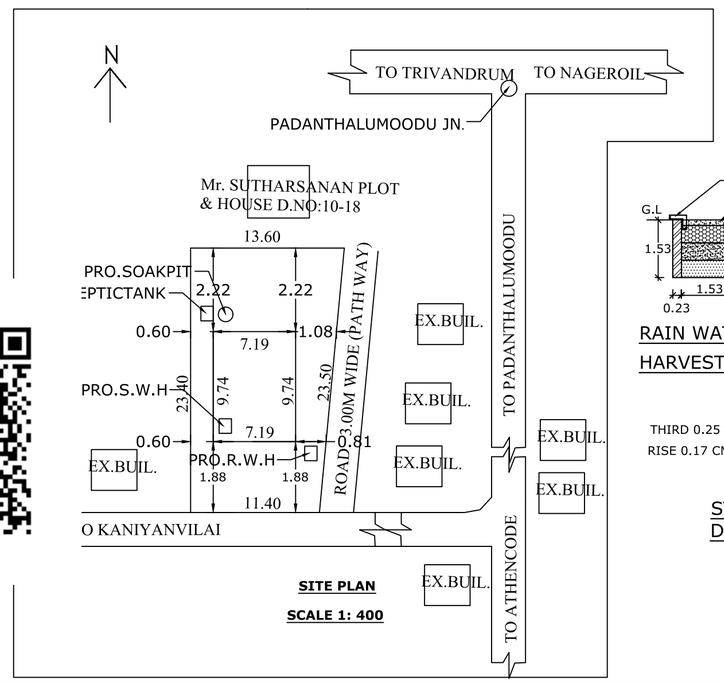

SITE PLAN

SCALE 1: 400

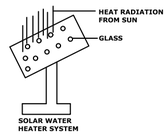

Owner Sig.

Engg. K. MANOHARAN, B.A.D.C.E.
LICENSED BUILDING SURVEYOR GRADE 3
Reg.No. 748/LS/2020/00008
STALIN BUILDING CONSTRUCTION
NAGEL NADAR COMPOUND
MAIN ROAD VETTUVENNI MARTHANDAM P.O
NEAR DHAS STUDIO
Cell , 9894585316

Engineer Sig.

RAIN WATER HARVESTING PIT

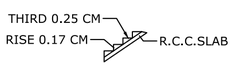

STAIRCASE DETAILS

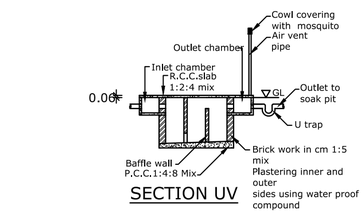

SECTION UV

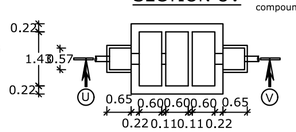

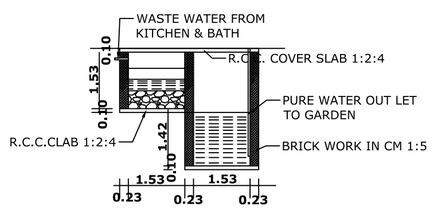

RECYCLING OF WASTE WATER SYSTEM

PLAN INFO
PLOT_AREA_M2=295.43
AS_AT_SITE=292.50
FMB_OR_PLR=295.43
AS_PER_DOCUMENT=295.43
ROAD_WIDTH=3.00
AVG_PLOT_WIDTH=11.40
AVG_PLOT_DEPTH=23.40
ROAD_LENGTH=100.00
AREA_TYPE=OTHERS
SURVEY_NO=550/14
PATTA_NO=2414
TALUK=KILLIYOOR
JURISDICTION_TYPE=PANCHAYAT
SINGLE_FAMILY_BLDG=YES
OSR_APPLICABLE=NO
OSR_SURR_BUYBACK_RETAIN=RETAIN
PREMIUM_FSI_REQUIRED=NO
OSR_SURRENDER_OR_BUYBACK=YES
IS_APPROVED_LAYOUT=YES
ORGANIZATION_TYPE=PRIVATE
CRZ=NO
LAND_USE_ZONE = RESIDENTIAL
PLOT_NO=0
DISTRICT=KANYAKUMARI
IS_SWIMMING_POOL_EXISTS=NO
RWH_DECLARED=YES
IF_HERITAGE_TOWN_LESSTHAN_1KM_RADIUS=NO

OFFICE USE ONLY.

THE LANDLENS SUITE

Eight ways to know a piece of land before you pay for it.

This report covers one part of the picture. These cover the rest, drawn from the same government records, for any property in Tamil Nadu.

LandLens One
Ask anything about a property and get an answer grounded in live government records, with the sources shown.
/landlens/one

Verify My Land
Every record check run on one property and returned as a single report.
/landlens/verify-my-land

Legal Opinion
An advocate's written opinion on the title, built on the records we pull for it.
/landlens

One Map
Every layer on one map: the parcel, its boundary, zoning, water bodies and what sits around it.
/landlens/one/map

PriceMap
What land actually changed hands for around this plot, taken from the registered deeds.
/landlens/pricemap

Build Scope
What you are allowed to build here: floor space, height, coverage and setbacks.
/landlens/build-scope

Property Tracker
Watch a property and hear about it when something new is registered against it.
/landlens/property-tracker

Deal Room
Run the transaction in one place: documents, stamping, signatures and the parties.
/landlens/deal-room

hello@verified.realestate · +91 9996 12 9996

FREE TOOLS · NO ACCOUNT NEEDED

Twenty-four checks you can run yourself, at no cost.

Records and verification

The registers themselves, read for you.

- Encumbrance Certificate
- Patta and Chitta
- Field Measurement Sketch
- EC Analyzer
- Bank charge check
- Court case search
- Seller background check
- Approval check by survey

Value and duty

What it is worth and what it costs to register.

- Guideline value by street
- Guideline value by survey
- Stamp duty and registration fees
- Capital gains
- Floor space index
- Area unit converter

Zoning and land use

What the plan says can happen on this land.

- Land use zone finder
- CMDA land use check
- Coastal regulation zone
- Master plan check
- Water bodies finder
- Airport height clearance

Registers and directories

Who holds it, and which office keeps the record.

- Find your registering office
- Temple property check
- Waqf property check
- RERA register

Every free tool
/tools

Services we run for you
/services

The LandLens suite
/landlens/one

Verified RealEstate™

Every claim in this document traces back to a government record.

- Legal opinions, due diligence and title verification
- Building plan, layout and sub-division approvals
- Completion and occupancy certificates, regularisation
- Escrow, negotiation and NRI property management
- Land survey, soil testing, architecture and construction

Verified RealEstate
3/350/2 Mettukuppam,
OMR Thoraipakkam,
Chennai 600 097, India
hello@verified.realestate
+91 9996 12 9996

Prepared from the registers named on the page each finding sits on. Where a register could not be read, this document says so in its place rather than leaving the gap to be read as a clean result.