Verified RealEstate™

REFERENCE
13/2025-2026

ISSUED
22 December 2025

PP APPROVAL RECORD

Planning Permission

Kanniyakumari district, Tamil Nadu

APPROVAL TYPE
Building Plan

ISSUING AUTHORITY
Rural Panchayat

The approval as the planning authority issued it, reproduced in full behind this page.

An approval speaks to what was sanctioned, not to what was built. Completion is a separate record.

Verified RealEstate™
3/350/2 Mettukuppam,
OMR Thoraipakkam,
Chennai 600 097, India

hello@verified.realestate
+91 9996 12 9996
verified.realestate

DIGITALLY VERIFIED RECORD

PLAN SHOWING THE PROPOSED CONSTRUCTION OF A R.C.C ROOF RESIDENTIAL BUILDING AFTER DEMOLISHING EXISTING TILED ROOF BUILDING DOOR NO: 5-28D AND RE.SURVEY.NO: 24/27 OF KURUNTHANCODE 'A' VILLAGE AT MALLANCODE IN NETTANCODE VILLAGE PANCHAYAT.

NAME OF OWNER: Mrs. C. SUJATHA

W/o. KUMAR

ELEVATION

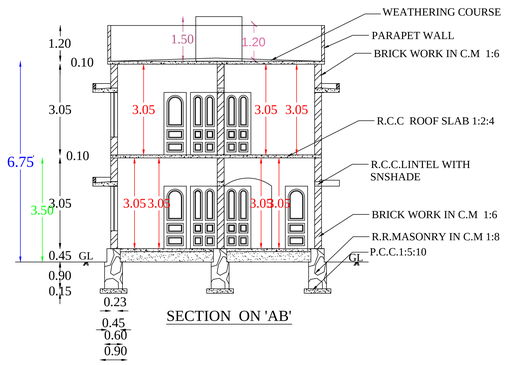

SECTION ON 'AB'

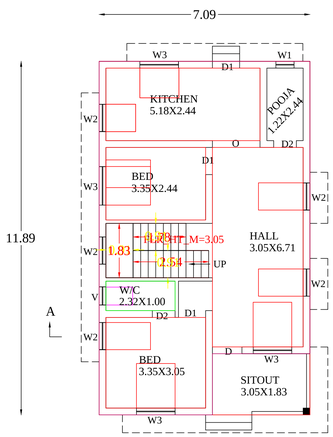

GROUND FLOOR PLAN

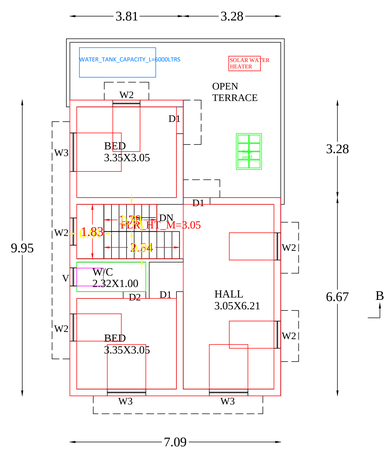

FIRST FLOOR PLAN

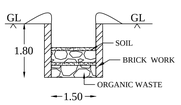

COMPOST PIT

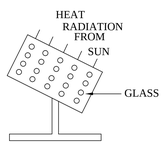

SOLAR SYSTEM

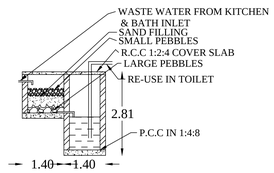

RECYCLING OF WASTE WATER KITCHEN & BATHROOM

HARD RED EARTH

0.60

N

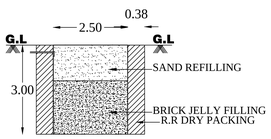

RAINWATER HARVESTING

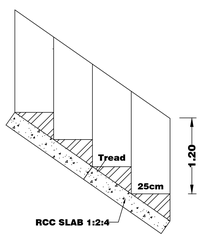

STAIR DETAILS

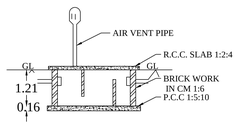

SECTION OF SEPTIC TANK

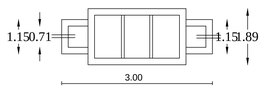

SEPTIC TANK PLAN

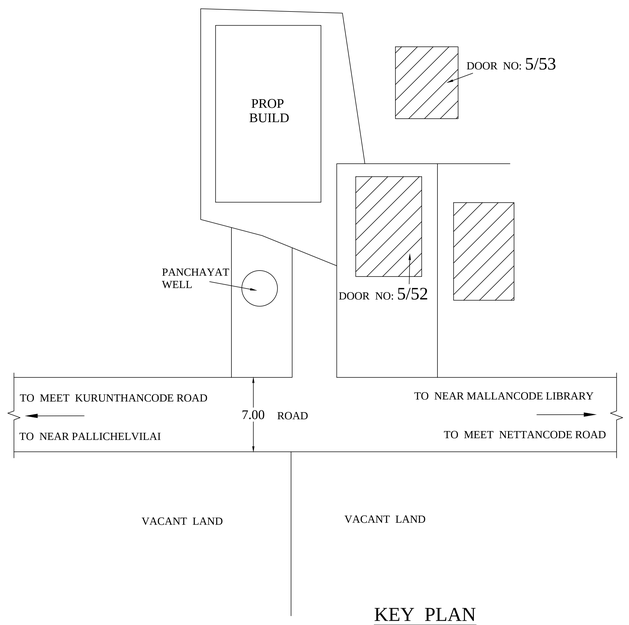

KEY PLAN

NOT TO SCALE

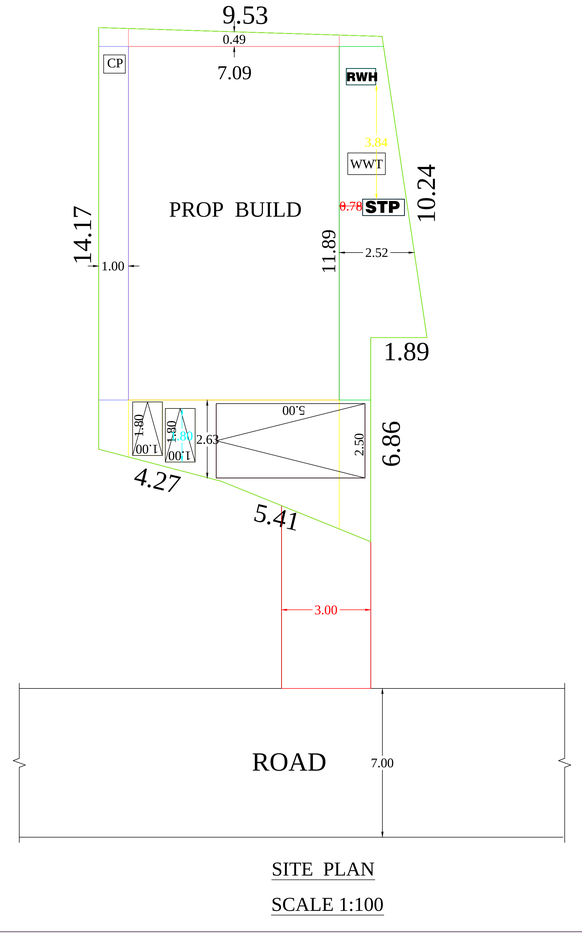

SITE PLAN

SCALE 1:100

PLAN INFO
PLOT_NO=NO
PATTA_NO=7270
TALUK=KALKULAM
DISTRICT=KANNYAKUMARI
SURVEY_NO=24/27
PLOT_AREA_M2= 151.77
AS_PER_DOCUMENT= 151.77
AS_AT_SITE=152.55
FMB_OR_PLR=151.77
JURISDICTION_TYPE=PANCHAYAT
SINGLE_FAMILY_BLDG=NO
LAND_USE_ZONE = RESIDENTIAL
CRZ=NO
SECURITY_ZONE=NO
WHETHER_GOVT_OR_AIDED_SCHOOL=NO
ROAD_WIDTH= 3.00
ROAD_LENGTH= 50.0
AVG_PLOT_DEPTH= 9.61
AVG_PLOT_WIDTH= 16.58
RWH_DECLARED=YES
BUILDING_NEAR_TO_RIVER=NO
OSR_APPLICABLE =NO
OSR_SURRENDER_OR_BUYBACK=BUYBACK
PREMIUM_FSI_REQUIRED=NO
IS_APPROVED_LAYOUT=NO
AREA_TYPE=OTHERS
BUILDING_NEAR_MONUMENT=NO
BUILDING_NEAR_GOVT_BLDG=NO
PROVISION_FOR_GREEN_BUILDINGS_AND_SUSTAINABILITY=NO
FIRE_PROTECTION_AND_FIRE_SAFETY_REQUIREMENTS=NO
NOC_FOR_CONSTRUCTION_NEAR_MONUMENT=NO
BARRIER_FREE_ACCESS_FOR_PHYSICALLY_CHALLENGED_PEOPLE=YES
FIRE_PROTECTION_AND_FIRE_SAFETY_REQUIREMENTS=YES
NOC_FIRE_DEPT=NO
IS_SWIMMING_POOL_EXISTS=NO
IF_HERITAGE_TOWN_LESSTHAN_1KM_RADIUS=NO
BLOCK_1_F-MSBI_MEMBER_COUNT=2

N
S

AREA DETAILS

SITE AREA : 3.750 CENTS, 151.77 Sq.m, 1633.65 Sq.ft

PLINTH AREA

GROUND FLOOR AREA : 84.24 Sq.m, 906.76 Sq.ft

FIRST FLOOR AREA : 59.73 Sq.m, 642.93 Sq.ft

TOTAL PLINTH AREA : 143.97 Sq.m, 1549.69 Sq.ft

VACANT AREA : 67.53 Sq.m, 726.89 Sq.ft

PLOT COVERAGE : (84.24/151.77)*100= 56.00%

PARKING AREA CALCULATION

FLOOR AREA DETAILS

GROUND FLOOR AREA : 71.40 SQ.M

FIRST FLOOR FLOOR AREA : 49.75 SQ.M

TOTAL FLOOR AREA : 121.15 SQ.M

UPTO 75 SQ.M : 1 TWO WHEELER SPACE

ABOVE 75 SQ.M : 1 CAR SPACE

REQUIRED AND PROVIDED PARKING

2 TWO WHEELER SPACE

1 CAR SPACE

JOINERY DETAILS

D : MAIN DOOR	: 1.00 x 2.10
D1 : DOOR	: 0.90 x 2.10
D2 : DOOR	: 0.75 x 2.10
W3 : WINDOW	: 1.35 x 1.50
W2 : WINDOW	: 0.90 x 1.50
W2' : WINDOW	: 0.90 x 1.00
W3' : WINDOW	: 1.35 x 1.00
V : VENTILATOR	: 0.60 x0.90

SCALE

PLAN	1: 100
SITE PLAN	1: 100

SITE BOUNDARY

PROP. BUILDING

ROAD, PATHWAY

EXIST. BUILDING

C. Sujatha

SIGNATURE OF LAND AND BUILDING OWNER:

R.KESAVAPRASAD
Registered Civil Engineer
Reg No : 151 /LS/2020/00003
10-17A,NEDUVILAI
VILLUKURY & (P.O) 629180
Cell :9443450670

SIGNATURE OF LICENCE SURVEYOR/ENGINEER

CERTIFICATE

Certified that provision shall be made to provide rain water arrangements system in the proposed construction.

"ALL DIMENSIONS ARE IN METERS "

THE LANDLENS SUITE

Eight ways to know a piece of land before you pay for it.

This report covers one part of the picture. These cover the rest, drawn from the same government records, for any property in Tamil Nadu.

LandLens One
Ask anything about a property and get an answer grounded in live government records, with the sources shown.
/landlens/one

Verify My Land
Every record check run on one property and returned as a single report.
/landlens/verify-my-land

Legal Opinion
An advocate's written opinion on the title, built on the records we pull for it.
/landlens

One Map
Every layer on one map: the parcel, its boundary, zoning, water bodies and what sits around it.
/landlens/one/map

PriceMap
What land actually changed hands for around this plot, taken from the registered deeds.
/landlens/pricemap

Build Scope
What you are allowed to build here: floor space, height, coverage and setbacks.
/landlens/build-scope

Property Tracker
Watch a property and hear about it when something new is registered against it.
/landlens/property-tracker

Deal Room
Run the transaction in one place: documents, stamping, signatures and the parties.
/landlens/deal-room

hello@verified.realestate · +91 9996 12 9996

FREE TOOLS · NO ACCOUNT NEEDED

Twenty-four checks you can run yourself, at no cost.

Records and verification

The registers themselves, read for you.

- Encumbrance Certificate
- Patta and Chitta
- Field Measurement Sketch
- EC Analyzer
- Bank charge check
- Court case search
- Seller background check
- Approval check by survey

Value and duty

What it is worth and what it costs to register.

- Guideline value by street
- Guideline value by survey
- Stamp duty and registration fees
- Capital gains
- Floor space index
- Area unit converter

Zoning and land use

What the plan says can happen on this land.

- Land use zone finder
- CMDA land use check
- Coastal regulation zone
- Master plan check
- Water bodies finder
- Airport height clearance

Registers and directories

Who holds it, and which office keeps the record.

- Find your registering office
- Temple property check
- Waqf property check
- RERA register

Every free tool
/tools

Services we run for you
/services

The LandLens suite
/landlens/one

Verified RealEstate™

Every claim in this document traces back to a government record.

- Legal opinions, due diligence and title verification
- Building plan, layout and sub-division approvals
- Completion and occupancy certificates, regularisation
- Escrow, negotiation and NRI property management
- Land survey, soil testing, architecture and construction

Verified RealEstate
3/350/2 Mettukuppam,
OMR Thoraipakkam,
Chennai 600 097, India
hello@verified.realestate
+91 9996 12 9996

Prepared from the registers named on the page each finding sits on. Where a register could not be read, this document says so in its place rather than leaving the gap to be read as a clean result.