Verified RealEstate™

REFERENCE
144/2026

ISSUED
20 July 2026

PP APPROVAL RECORD

Planning Permission

Kanniyakumari district, Tamil Nadu

APPROVAL TYPE
Building Plan

ISSUING AUTHORITY
Town Panchayat

The approval as the planning authority issued it, reproduced in full behind this page.

An approval speaks to what was sanctioned, not to what was built. Completion is a separate record.

Verified RealEstate™
3/350/2 Mettukuppam,
OMR Thoraipakkam,
Chennai 600 097, India

hello@verified.realestate
+91 9996 12 9996
verified.realestate

DIGITALLY VERIFIED RECORD

PLAN SHOWING THE PROPOSED ADDITIONAL CONSTRUCTION OF A SHEET ROOF COMMERCIAL BUILDING EX.D.NO:17-64/2 AT PAYATHANKALAVILAI, KALLANKUZHI IN RE-SY-NO: 248/8A,PATTA.NO:4228 OF KUMARANKUDI VILLAGE, VERKALAMBI TOWN PANCHAYAT, THIRUVATTAR TALUK, K.K.DISTRICT.

NAME OF OWNER : Mrs.M.V.ADLIN SHIJI,
W/O.Mr.J.HADLEE,
PAYATHANKALAVILAI, KALLANKUZHI & (P.O),

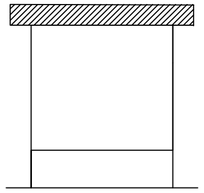

ELEVATION

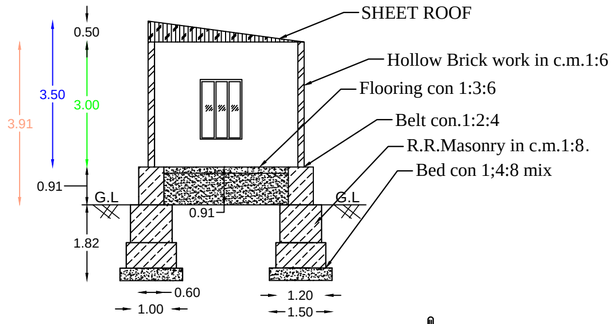

SECTION ON 'AB'

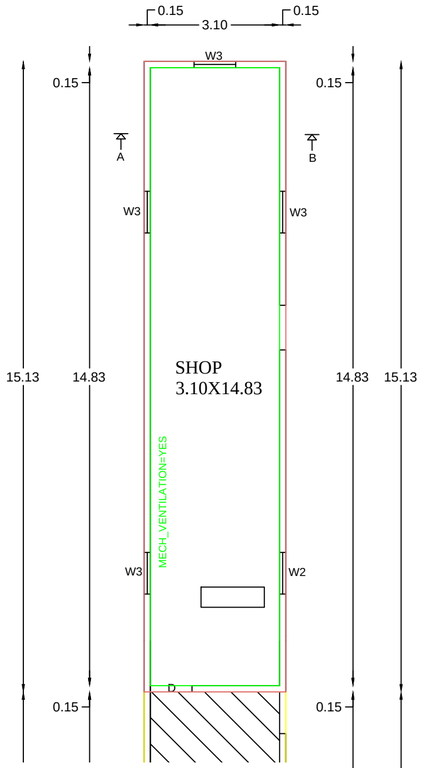

PLAN

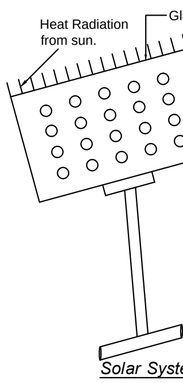

Solar System

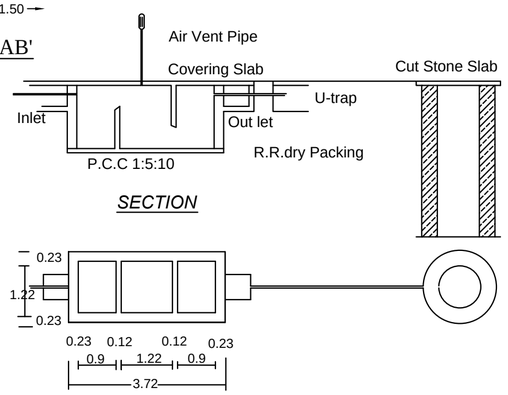

SECTION

PLAN SCALE 1cm : 1m

SEPTIC TANK DETAILS

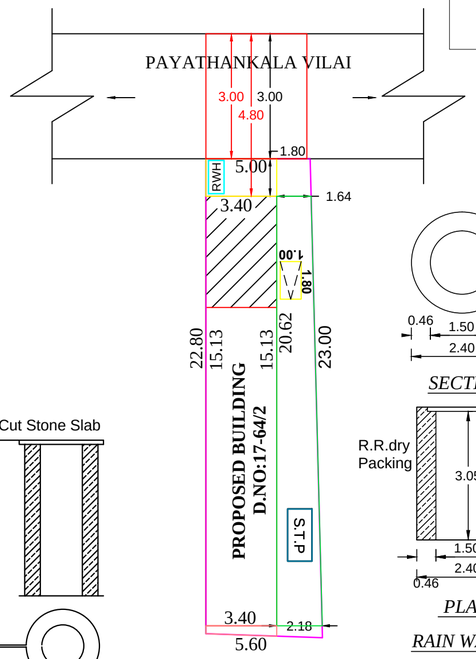

SITE PLAN
SCALE 1:100

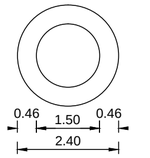

SECTION

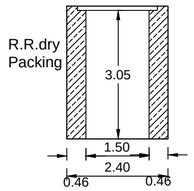

PLAN

RAIN WATER HARVESTING ARRANGEMENT

NOT TO SCALE

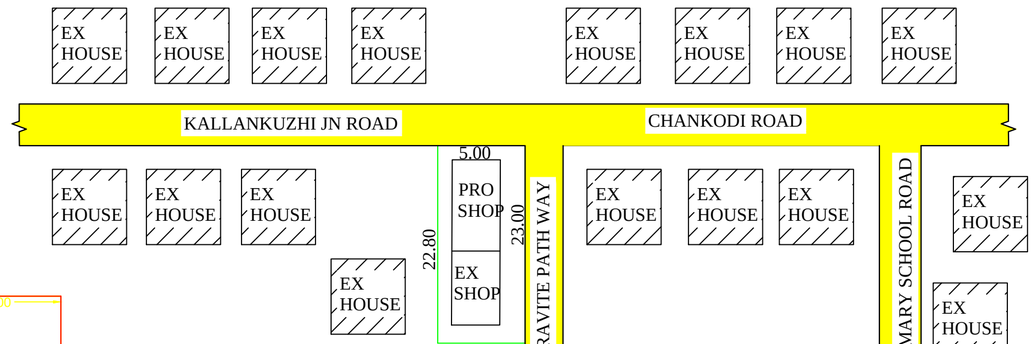

KEY PLAN
SCALE 1:400

TRAIL PIT

NOT TO SCALE

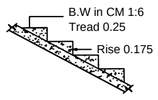

STAIRCASE DETAILS
Not to scale

WATER HEATER

Solar panel

AREA DETIALS

SITE AREA	:	121.41 Sq.m	(1306.86 Sq.ft)
EXISTING APPROVAL AREA DETAILS:			
GROUND FLOOR AREA	:	18.67 Sq.m	(200.96 Sq.ft)
PROPOSED AREA DETAILS:			
GROUND FLOOR AREA	:	51.44 Sq.m	(553.70 Sq.ft)
GROUND FLOOR CARPET AREA	:	45.97 Sq.m	(494.82 Sq.ft)
VACANT AREA	:	51.30 Sq.m	(552.19 Sq.ft)

SCHEDULE OF JOINERIES : ALL DIMENSIONS ARE IN METERS SCALE 1:100

DOOR	D	1.00X2.10
DOOR	D1	0.90X2.10
WINDOW	W3	1.00X1.40
WINDOW	W2	1.00X1.30
VENTILATOR	V	0.45X0.75

COLOUR INDEX

- ROAD & STREET
- PROPOSED
- EXISTING BUILDING
- BOUNDARY

PLAN INFO
PLOT_NO=NO
PATTA_NO=NO
TALUK=THIRUVATTAR
DISTRICT=KANNYAKUMARI
SURVEY_NO=248/8A
PLOT_AREA_M2=121.41
AS_PER_DOCUMENT=121.41
AS_AT_SITE=121.28
FMB_OR_PLR=121.41
JURISDICTION_TYPE=PANCHAYAT
SINGLE_FAMILY_BLDG=YES
LAND_USE_ZONE = COMMERCIAL
CRZ=NO
SECURITY_ZONE=NO
ACCESS_WIDTH_M=9.00
WHETHER_GOVT_OR_AIDED_SCHOOL=NO
ROAD_WIDTH=9.00
ROAD_LENGTH=200
AVG_PLOT_DEPTH= 23.00
AVG_PLOT_WIDTH=5.00
RWH_DECLARED=YES
BUILDING_NEAR_TO_RIVER=NO
OSR_APPLICABLE =NO
OSR_SURRENDER_OR_BUYBACK=BUYBACK
PREMIUM_FSI_REQUIRED=NO
IS_APPROVED_LAYOUT=NO
AREA_TYPE=CBA
BUILDING_NEAR_MONUMENT=NO
BUILDING_NEAR_GOVT_BLDG=NO
PROVISION_FOR_GREEN_BUILDINGS_AND_SUSTAINABILITY=NO
FIRE_PROTECTION_AND_FIRE_SAFETY_REQUIREMENTS=NO
NOC_FOR_CONSTRUCTION_NEAR_MONUMENT=NO
BARRIER_FREE_ACCESS_FOR_PHYSICALLY_CHALLENGED_PEOPLE=YES
FIRE_PROTECTION_AND_FIRE_SAFETY_REQUIREMENTS=YES
NOC_FIRE_DEPT=NO
IS_SWIMMING_POOL_EXISTS=NO
IF_HERITAGE_TOWN_LESSTHAN_1KM_RADIUS=NO
BLOCK_1_B-SHOP_MEMBER_COUNT=1

SIGNATURE OF OWNER

Er. A. RUSSEL CLINTON, M.E.,
STRUCTURAL ENGINEER
LICENCE BUILDING SURVEYOR
RUSSEL CLINTON CONSTRUCTION
MANALIKARAI & P.O., K. K. DIST.-629164
Mob : +91 89037 10570.

SIGNATURE OF ENGINEER

FOR OFFICE USE ONLY

PREPARED BY

RUSSEL CLINTON CONSTRUCTION
MAVARAVILAI,
MANALIKARAI-(P.O)

THE LANDLENS SUITE

Eight ways to know a piece of land before you pay for it.

This report covers one part of the picture. These cover the rest, drawn from the same government records, for any property in Tamil Nadu.

LandLens One
Ask anything about a property and get an answer grounded in live government records, with the sources shown.
/landlens/one

Verify My Land
Every record check run on one property and returned as a single report.
/landlens/verify-my-land

Legal Opinion
An advocate's written opinion on the title, built on the records we pull for it.
/landlens

One Map
Every layer on one map: the parcel, its boundary, zoning, water bodies and what sits around it.
/landlens/one/map

PriceMap
What land actually changed hands for around this plot, taken from the registered deeds.
/landlens/pricemap

Build Scope
What you are allowed to build here: floor space, height, coverage and setbacks.
/landlens/build-scope

Property Tracker
Watch a property and hear about it when something new is registered against it.
/landlens/property-tracker

Deal Room
Run the transaction in one place: documents, stamping, signatures and the parties.
/landlens/deal-room

hello@verified.realestate · +91 9996 12 9996

FREE TOOLS · NO ACCOUNT NEEDED

Twenty-four checks you can run yourself, at no cost.

Records and verification

The registers themselves, read for you.

- Encumbrance Certificate
- Patta and Chitta
- Field Measurement Sketch
- EC Analyzer
- Bank charge check
- Court case search
- Seller background check
- Approval check by survey

Value and duty

What it is worth and what it costs to register.

- Guideline value by street
- Guideline value by survey
- Stamp duty and registration fees
- Capital gains
- Floor space index
- Area unit converter

Zoning and land use

What the plan says can happen on this land.

- Land use zone finder
- CMDA land use check
- Coastal regulation zone
- Master plan check
- Water bodies finder
- Airport height clearance

Registers and directories

Who holds it, and which office keeps the record.

- Find your registering office
- Temple property check
- Waqf property check
- RERA register

Every free tool
/tools

Services we run for you
/services

The LandLens suite
/landlens/one

Verified RealEstate™

Every claim in this document traces back to a government record.

- Legal opinions, due diligence and title verification
- Building plan, layout and sub-division approvals
- Completion and occupancy certificates, regularisation
- Escrow, negotiation and NRI property management
- Land survey, soil testing, architecture and construction

Verified RealEstate
3/350/2 Mettukuppam,
OMR Thoraipakkam,
Chennai 600 097, India
hello@verified.realestate
+91 9996 12 9996

Prepared from the registers named on the page each finding sits on. Where a register could not be read, this document says so in its place rather than leaving the gap to be read as a clean result.