Verified RealEstate™

REFERENCE
18/2026

ISSUED
06 November 2026

PP APPROVAL RECORD

Planning Permission

Survey 190

Mullanginavilai

Kanniyakumari district, Tamil Nadu

APPROVAL TYPE
Building Plan

ISSUING AUTHORITY
Rural Panchayat

The approval as the planning authority issued it, reproduced in full behind this page.

An approval speaks to what was sanctioned, not to what was built. Completion is a separate record.

Verified RealEstate™
3/350/2 Mettukuppam,
OMR Thoraipakkam,
Chennai 600 097, India

hello@verified.realestate
+91 9996 12 9996
verified.realestate

DIGITALLY VERIFIED RECORD

PLAN SHOWING THE EXTENSION PROPOSED CONSTRUCTION OF A R.C.C ROOF COMMERCIAL BUILDING (SHOP) IN RE.SY.NO:190/10A2, AT KANGIRAMKATTUVILAI, MULLANGINAVILAI VILLAGE, MULLANGINAVILAI VILLAGE PANCHAYAT, KILLIYOOR TALUK, KANYAKUMARI DISTRICT.

OWNER NAME : Mr.T. JEBARAJ, S/o Mr.THANKARAJ

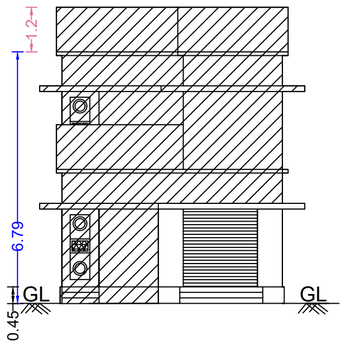

FRONT ELEVATION

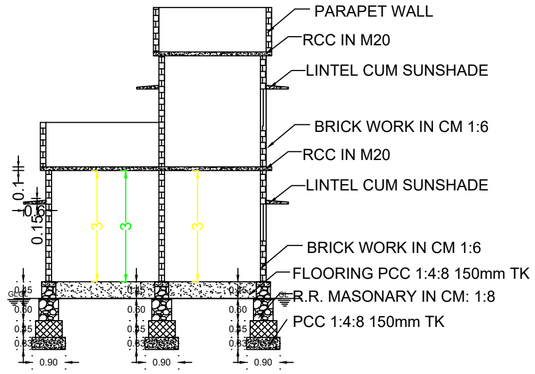

SECTION A-A

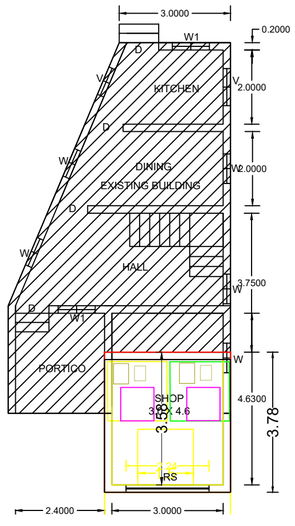

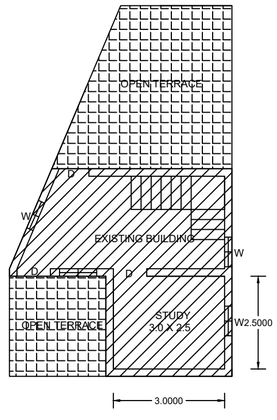

FIRST FLOOR PLAN

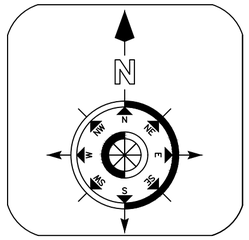

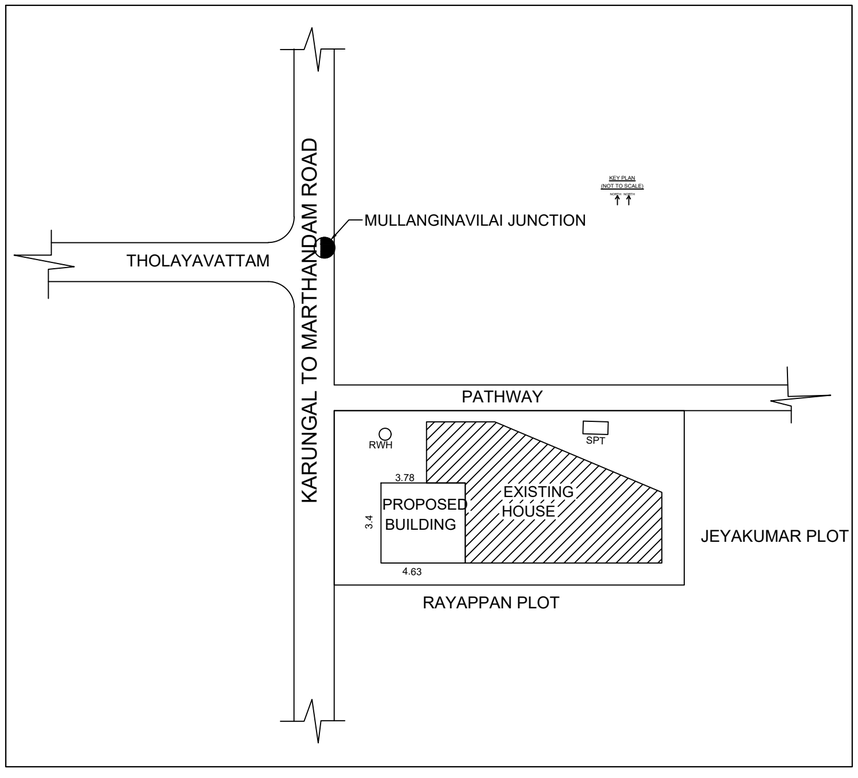

REFERENCES

MD	MAIN DOOR	1.5 X 2.10
D2	DOOR 2	0.75 X 2.10
W3	WINDOW	1.50 X 1.50
V	VENTILATOR	0.90 X 0.90

AREA DETAILS	SQ.MT	SQ.FT
AREA OF SITE(4.500 CENTS)	182.11	1960.2
EXISTING GROUND FLOOR (RESIDENTIAL)	43.74	470.81
EXISTING FIRST FLOOR (RESIDENTIAL)	25.04	269.53
PROPOSED AREA OF GROUND FLOOR(SHOP)	12.85	138.32
TOTAL PROPOSED BUILDUP AREA (SHOP)	12.85	138.32

FSI= 12.85/182.11 = 0.14

PLAN INFO
SURVEY_NO= 190/10A2
PATTA_NO=9233
TALUK=KILLIYOOR
AS_AT_SITE=51.44
FMB_OR_PLR=51.44
PLOT_AREA_M2=51.44
AS_PER_DOCUMENT=182.11
OSR_APPLICABLE=NO
PREMIUM_FSI_REQUIRED=NO
IS_APPROVED_LAYOUT=YES
IS_SWIMMING_POOL_EXISTS=NO
IF_HERITAGE_TOWN_LESSTHAN_1KM_RADIUS=NO
DISTRICT=KANNIYAKUMARI
SINGLE_FAMILY_BLDG=YES
CRZ=NO
SECURITY_ZONE=NO
WHETHER_GOVT_OR_AIDED_SCHOOL=NO
ROAD_WIDTH =3.85
ROAD_LENGTH =210
AVG_PLOT_DEPTH= 2.47
AVG_PLOT_WIDTH= 6.13
LAND_USE_ZONE = COMMERCIAL
RWH_DECLARED=YES
BUILDING_NEAR_TO_RIVER=NO
AREA_TYPE=OTHERS
BLOCK_1_B-SHOP_MEMBER_COUNT=3
BUILDING_NEAR_MONUMENT=NO
BUILDING_NEAR_GOVT_BLDG=NO
JURISDICTION_TYPE=PANCHAYAT

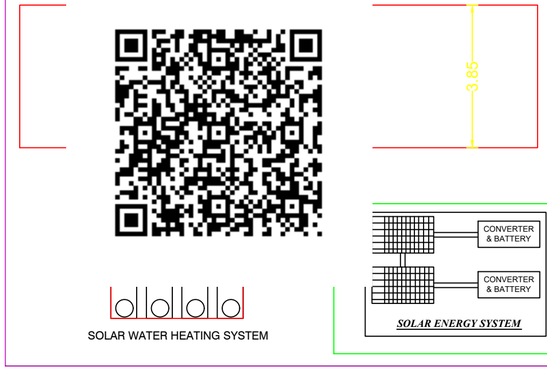

SOLAR WATER HEATING SYSTEM

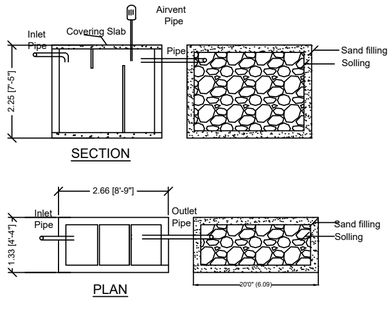

DETAILS OF SEPTIC TANK & DISPERSION TRENCH

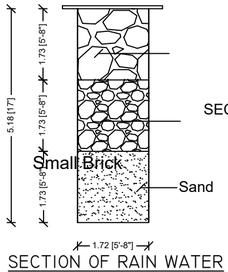

SECTION OF RAIN WATER COLLECTION PITS (NTS)

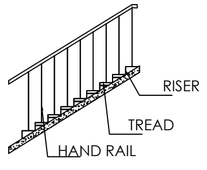

SECTION OF STAIR CASE DETAILS

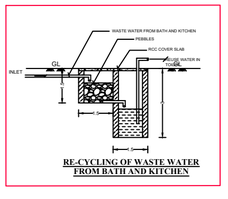

OWNERS SIGNATURE

Er. KANNAN.S, M.TECH(C.E.M),M.E(S.E),P.G.D.T.A(VASTU)
Reg. Eng-II, Reg. No. 149/LS/2023/00007
ANUK TRADITECH, Painkulam - 629 173
Mob: 7708107791

ENGINEER SIGNATURE

THE LANDLENS SUITE

Eight ways to know a piece of land before you pay for it.

This report covers one part of the picture. These cover the rest, drawn from the same government records, for any property in Tamil Nadu.

LandLens One
Ask anything about a property and get an answer grounded in live government records, with the sources shown.
/landlens/one

Verify My Land
Every record check run on one property and returned as a single report.
/landlens/verify-my-land

Legal Opinion
An advocate's written opinion on the title, built on the records we pull for it.
/landlens

One Map
Every layer on one map: the parcel, its boundary, zoning, water bodies and what sits around it.
/landlens/one/map

PriceMap
What land actually changed hands for around this plot, taken from the registered deeds.
/landlens/pricemap

Build Scope
What you are allowed to build here: floor space, height, coverage and setbacks.
/landlens/build-scope

Property Tracker
Watch a property and hear about it when something new is registered against it.
/landlens/property-tracker

Deal Room
Run the transaction in one place: documents, stamping, signatures and the parties.
/landlens/deal-room

FREE TOOLS · NO ACCOUNT NEEDED

Twenty-four checks you can run yourself, at no cost.

Records and verification

The registers themselves, read for you.

- Encumbrance Certificate
- Patta and Chitta
- Field Measurement Sketch
- EC Analyzer
- Bank charge check
- Court case search
- Seller background check
- Approval check by survey

Value and duty

What it is worth and what it costs to register.

- Guideline value by street
- Guideline value by survey
- Stamp duty and registration fees
- Capital gains
- Floor space index
- Area unit converter

Zoning and land use

What the plan says can happen on this land.

- Land use zone finder
- CMDA land use check
- Coastal regulation zone
- Master plan check
- Water bodies finder
- Airport height clearance

Registers and directories

Who holds it, and which office keeps the record.

- Find your registering office
- Temple property check
- Waqf property check
- RERA register

Every free tool
/tools

Services we run for you
/services

The LandLens suite
/landlens/one

Verified RealEstate™

Every claim in this document traces back to a government record.

- Legal opinions, due diligence and title verification
- Building plan, layout and sub-division approvals
- Completion and occupancy certificates, regularisation
- Escrow, negotiation and NRI property management
- Land survey, soil testing, architecture and construction

Verified RealEstate
3/350/2 Mettukuppam,
OMR Thoraipakkam,
Chennai 600 097, India
hello@verified.realestate
+91 9996 12 9996

Prepared from the registers named on the page each finding sits on. Where a register could not be read, this document says so in its place rather than leaving the gap to be read as a clean result.