PP APPROVAL RECORD

Planning Permission

Survey 454

Melappaguthi

Karur district, Tamil Nadu

APPROVAL TYPE
Building Plan

ISSUING AUTHORITY
Rural Panchayat

The approval as the planning authority issued it, reproduced in full behind this page.

An approval speaks to what was sanctioned, not to what was built. Completion is a separate record.

Verified RealEstate™

3/350/2 Mettukuppam,
OMR Thoraipakkam,
Chennai 600 097, India

hello@verified.realestate

+91 9996 12 9996

verified.realestate

PLAN SHOWING THE PROPOSED CONSTRUCTION OF RCC ROOF GROUND & FIRST FLOOR RESIDENTIAL BUILDING AT S.NO:454/1B,PATTA NO:3768, MELAPPAGUTHI VILLAGE AND PANCHYAT KADAVUR TALUK,KARUR DISTRICT.,

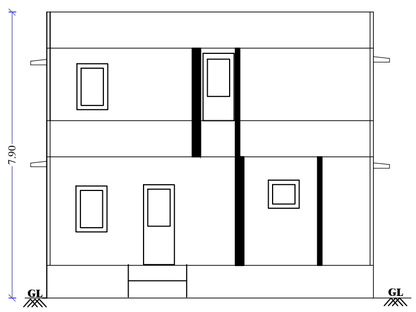

ELEVATION

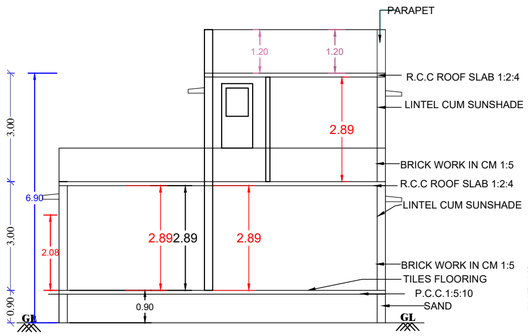

SECTION ON A-B

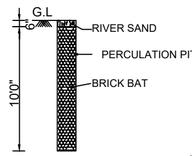

PERCULATION PIT



ELEVATION

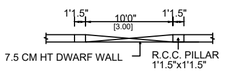

COMPOUND WALL PLAN

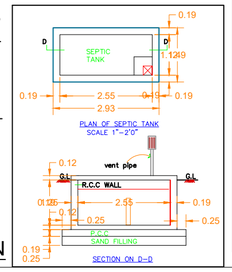

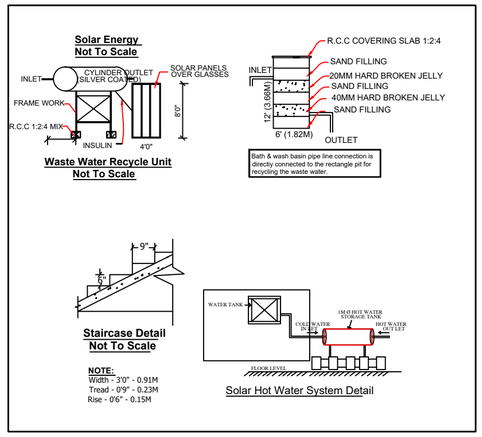

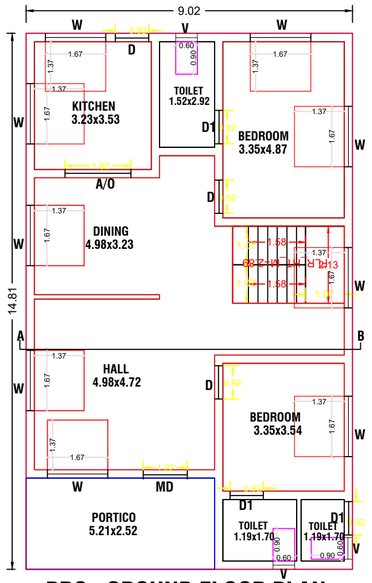

PRO., GROUND FLOOR PLAN

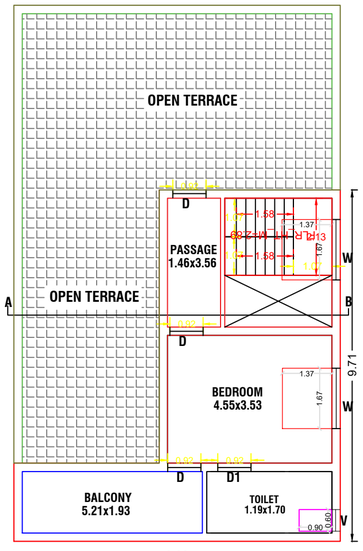

PRO., FIRST FLOOR PLAN



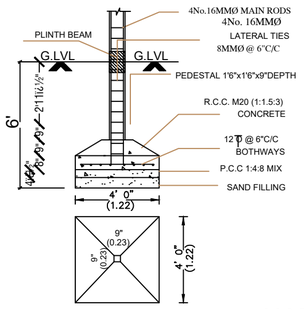

FOUNDATION DETAIL

[SCALE: 1:50]

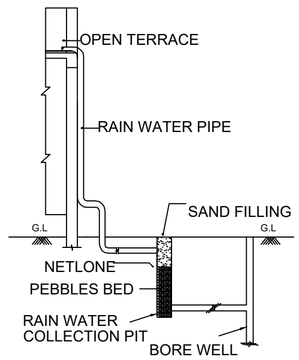

RAIN WATER HARVESTING SYSTEM

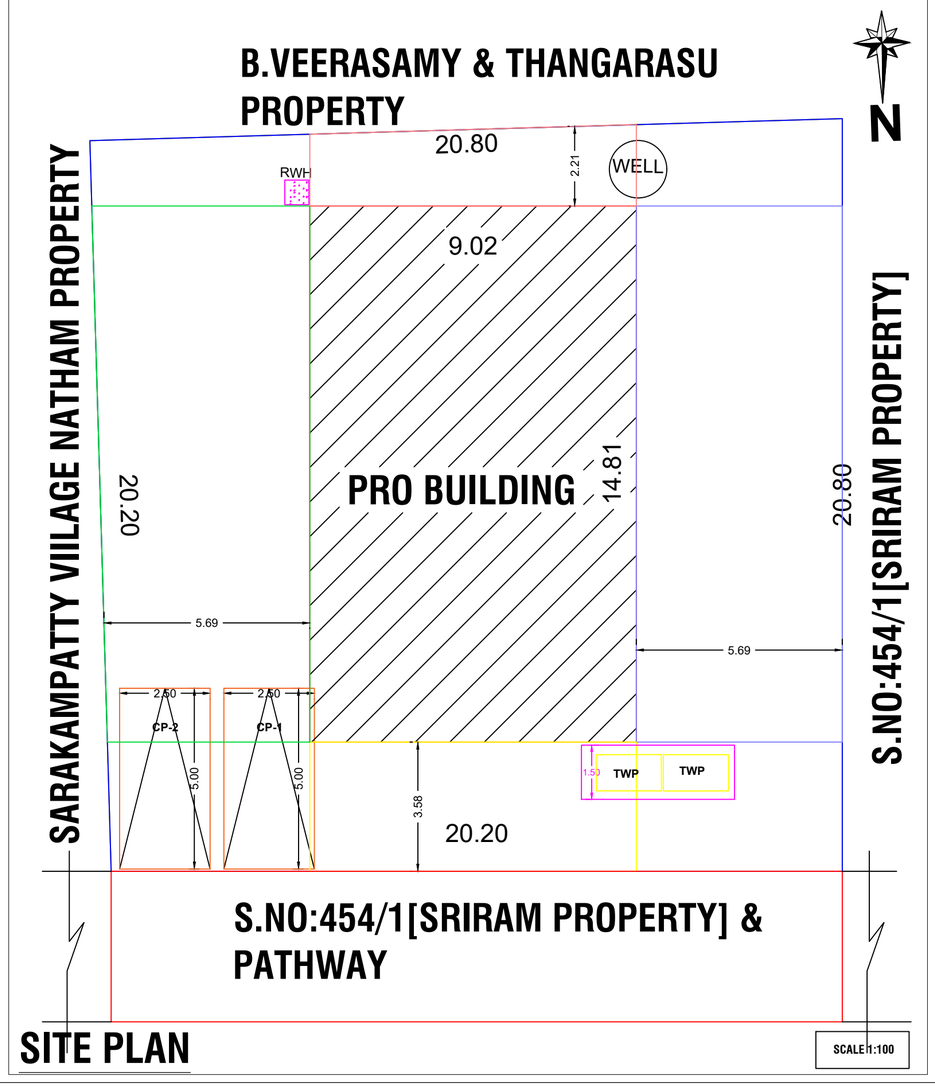

SITE PLAN

SCALE 1:100

SCHEDULE OF JOINERY

TYPE	DESCRIPTION	SIZE
MD	MAIN DOOR	1.22M X 2.10M
D	DOOR	0.93M X 2.10M
D1	DOOR	0.75M X 2.10M
W	WINDOW	1.22M X 1.37M
V	VENTILATION	0.60M X 0.90M

AREA DETAILS:-

AREA STATEMENT	SQ.FT	SQ.M
SITE AREA:		
AS PER DOCUMENT	4360.00	405.00
AS PER SITE	4360.00	405.00
AS PER PATTA	4360.00	405.00
RESIDENTIAL GROUNDFLOOR AREA	1437.95	133.59
RESIDENTIAL FIRST FLOOR AREA	616.55	57.28
VACANT LAND	2922.05	271.41

FSI CALCULATION

$$FSI = \frac{\text{TOTAL BUILT UP AREA}}{\text{TOTAL PLOT EXTENT}}$$

$$FSI = \frac{190.87}{405.00} = 0.47\% < 2.0\ \%$$

PARKING PROVIDED:

NO OF TWO WHEELER PARKING:2 NOS

NO OF CAR PARKING:2NOS

APPLICANT :

S. Sarashvathi

Mr.S.SARASHVATHI

ENGINEER :

K. Swathi

Er.K.Swathi., B.E.,CIVIL,
Consulting/Registered Engineer,
KCMC-Reg.No:082/LS/2021/00008,
Plot-21, Teachers colony,Balaji nagar
Thanthonimalai, Karur - 639 005.
Mobile : 7868924898, 9688037242
Email : swathicivil006@gmail.com

OFFICE USE;

THE LANDLENS SUITE

Eight ways to know a piece of land before you pay for it.

This report covers one part of the picture. These cover the rest, drawn from the same government records, for any property in Tamil Nadu.

LandLens One
Ask anything about a property and get an answer grounded in live government records, with the sources shown.
/landlens/one

Verify My Land
Every record check run on one property and returned as a single report.
/landlens/verify-my-land

Legal Opinion
An advocate's written opinion on the title, built on the records we pull for it.
/landlens

One Map
Every layer on one map: the parcel, its boundary, zoning, water bodies and what sits around it.
/landlens/one/map

PriceMap
What land actually changed hands for around this plot, taken from the registered deeds.
/landlens/pricemap

Build Scope
What you are allowed to build here: floor space, height, coverage and setbacks.
/landlens/build-scope

Property Tracker
Watch a property and hear about it when something new is registered against it.
/landlens/property-tracker

Deal Room
Run the transaction in one place: documents, stamping, signatures and the parties.
/landlens/deal-room

FREE TOOLS · NO ACCOUNT NEEDED

Twenty-four checks you can run yourself, at no cost.

Records and verification

The registers themselves, read for you.

- Encumbrance Certificate
- Patta and Chitta
- Field Measurement Sketch
- EC Analyzer
- Bank charge check
- Court case search
- Seller background check
- Approval check by survey

Value and duty

What it is worth and what it costs to register.

- Guideline value by street
- Guideline value by survey
- Stamp duty and registration fees
- Capital gains
- Floor space index
- Area unit converter

Zoning and land use

What the plan says can happen on this land.

- Land use zone finder
- CMDA land use check
- Coastal regulation zone
- Master plan check
- Water bodies finder
- Airport height clearance

Registers and directories

Who holds it, and which office keeps the record.

- Find your registering office
- Temple property check
- Waqf property check
- RERA register

Every free tool
/tools

Services we run for you
/services

The LandLens suite
/landlens/one

Verified RealEstate™

Every claim in this document traces back to a government record.

- Legal opinions, due diligence and title verification
- Building plan, layout and sub-division approvals
- Completion and occupancy certificates, regularisation
- Escrow, negotiation and NRI property management
- Land survey, soil testing, architecture and construction

Verified RealEstate
3/350/2 Mettukuppam,
OMR Thoraipakkam,
Chennai 600 097, India
hello@verified.realestate
+91 9996 12 9996

Prepared from the registers named on the page each finding sits on. Where a register could not be read, this document says so in its place rather than leaving the gap to be read as a clean result.