PP APPROVAL RECORD

# Planning Permission

Madurai district, Tamil Nadu

APPROVAL TYPE
**Building Plan**

ISSUING AUTHORITY
**Rural Panchayat**

The approval as the planning authority issued it, reproduced in full behind this page.

An approval speaks to what was sanctioned, not to what was built. Completion is a separate record.

Verified RealEstate™
3/350/2 Mettukuppam,
OMR Thoraipakkam,
Chennai 600 097, India

hello@verified.realestate
+91 9996 12 9996
verified.realestate

# PLAN SHOWING THE PROPOSED CONSTRUCTION OF A COMMERCIAL OFFICE AND TOILET BUILDING IN S.No: 85/4 , PATTA No - 882, AT KETHUVARPATTI VILLAGE, KETHUVARPATTI PANCHAYAT, SEDAPATTI PANCHAYAT UNION, PERAIYUR TALUK, MADURAI DISTRICT.,

**M/S - VALAGURUNATHA CHARITABLE TRUST**

## AREA

| | | | |
|---|---|---|---|
| SITE | AREA 47 CENTS = | ( 20471.32 Sq.ft ) | 1901.84 Sq.m |
| ---------- (Ground floor) ---------- | | | |
| PLINTH | AREA | ( 1993.75 Sq.ft ) | 185.22 Sq.m |
| OPEN | AREA | ( 18477.57 Sq.ft ) | 1716.62 Sq.m |

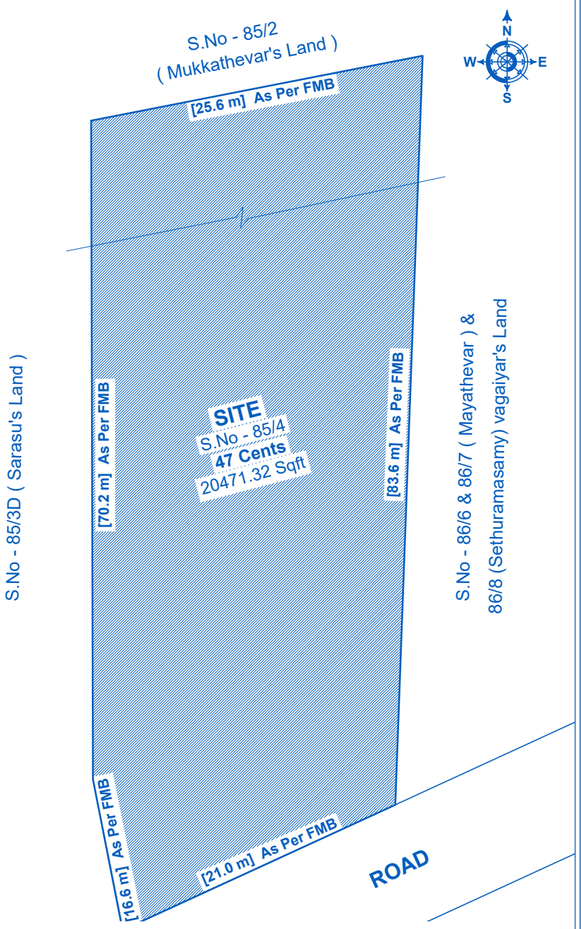


Scale-1:200

Roc.No - 01/2025-2026 & BA.No -01/2025

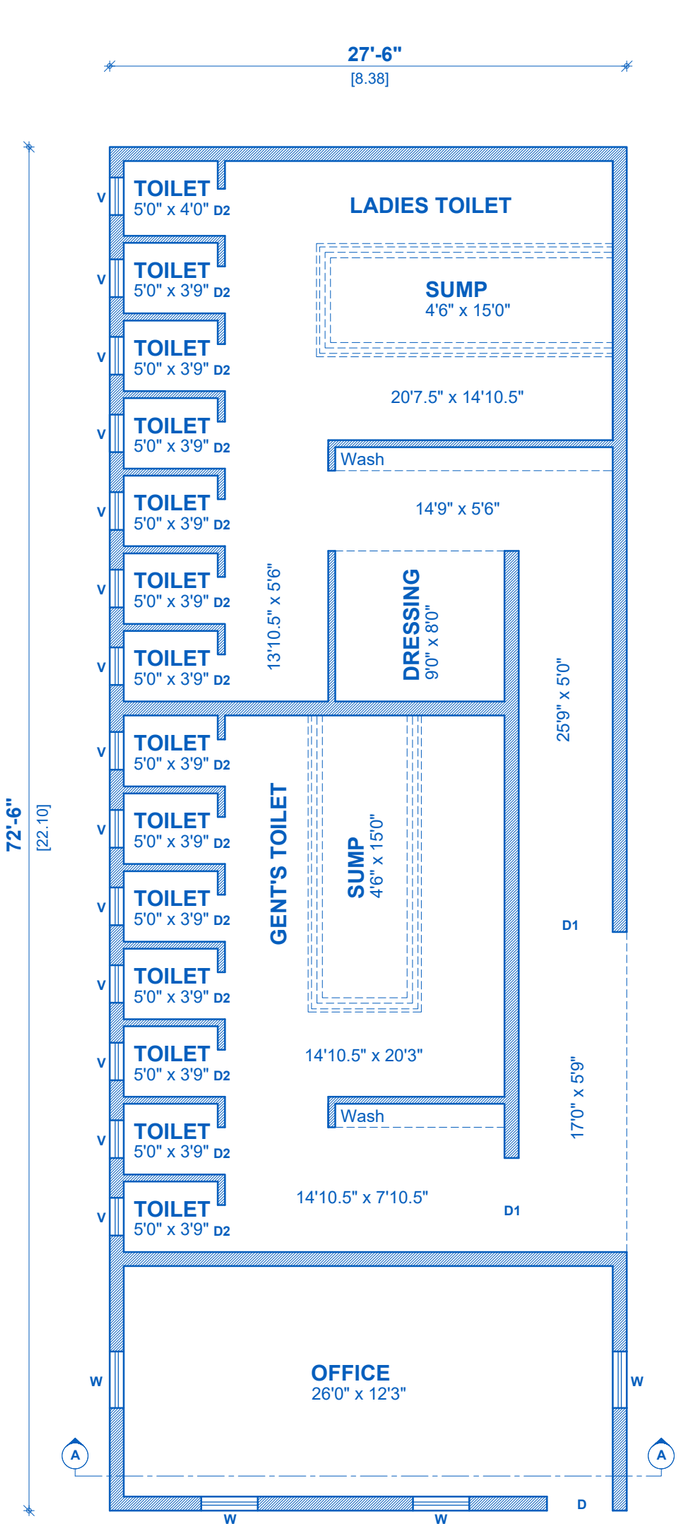


Scale-1:100 **GROUND FLOOR PLAN**

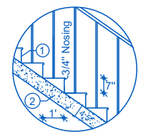


TREAD 0.250 (1") RISE 0.175 (7")
1 . BRICK WORKS FOR STEPS IN C.M.1:4 MIX
2 . WAIST SLAB IN R.C.C 1:2:4 MIX & 150mm tk
Not For Scale

**STAIRCASE SECTION**

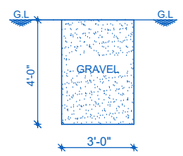


**TRIAL PIT**
Not For Scale

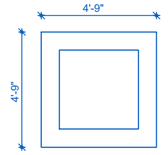


PLAN

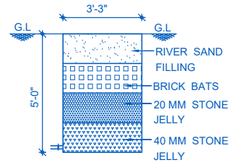


SECTION

**RAIN WATER HARVESTION**
Not For Scale

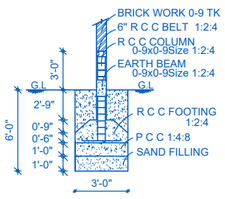


**FOUNDATION** Not For Scale

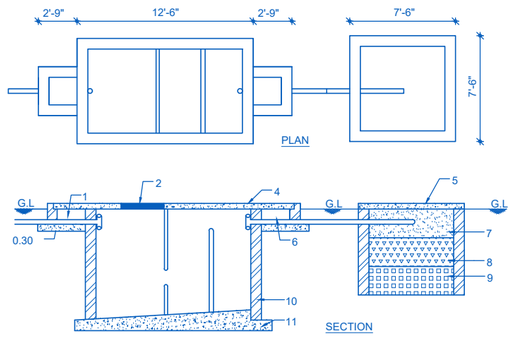


1 - Inlet Chamer
2 - Man Hole Cover
3 - A.C Vent Pipe 12'0" Ht
4 - R.C.C Covering Slab 1:2:4 Mix ,0.11 thick
5 - Formation Level Earth
6 - Outlet Chamer
7 - 0.30 Sand Enclasing
8 - Broken Stone 2" Ring
9 - Brick Work
10 - Brick Work In C.M 1:6 Mix And C.M 1:6 Mix Inside Plaster With C.M 1:3 Mix
11 - Concrete Broken Stone In C.M 1:6 Mix

**SEPTIC TANK** Not For Scale

## SPECIFICATION

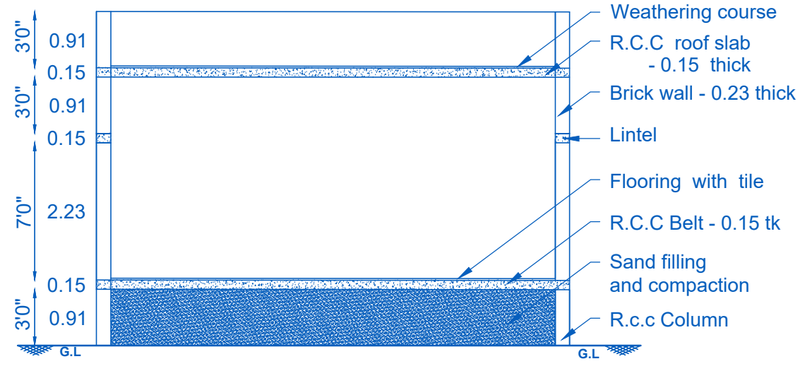


**SECTION ON A-A**

## APPLICANTS

**For - " VALAGURUNATHA CHARITABLE TRUST "**

1. Mr.S.PETHANASAMY., ( President )
2. Mr.P.BALAKRISHNAN., ( Secretary )
3. Mr.T.CHELLAPANDI., ( Treasurer )

## JOINERIES

| | | |
|---|---|---|
| D - Door | ( 3'0" x 7'0" ) | |
| D1 - Door | ( 5'0" x 7'0" ) | |
| D2 - Door | ( 2'6" x 7'0" ) | |
| W - Window | ( 3'0" x 4'0" ) | |
| V - Ventilator | ( 2'0" x 2'0" ) | |

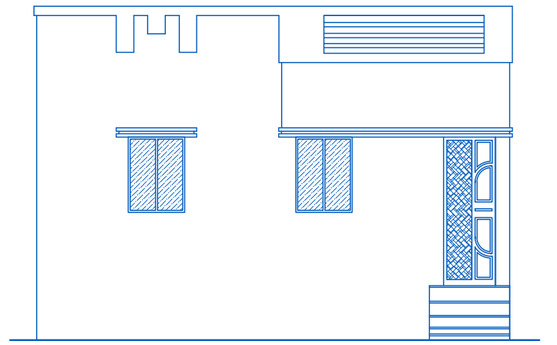

**ELEVATION**


Er.K.P.MURUGAN,DCE.,L.B.S.,
LICENSED ENGINEER
SABHARI CONSTRUCTION
Abbas Nagar, Peraiyur.
Mob: 9786682791,
9080911066.

Er.K.P.MURUGAN,DCE., L.B.S.,
LICENSED ENGINEER
SABHARI CONSTRUCTION,
Abbas Nagar,Peraiyur.
Mob: 9786682791,
9080911066.

Er.Vr.M.IRULANDI. M.Tech(Struc), M.Sc(Rev), M.I.E.,F.I.V.,P.E.,
Structural & Chartered Engineer - M-1677408,
REGISTERED ENGINEER GRADE-I -117/LS/2019/00010
Income Tax (WT) Registered, Panel &Approved Valuer
CCIT Reg No -16/RV/15-16 & F-21330
PROFESSIONAL ENGINEER - PE/00008/17
DISTRICT PANEL CLASS-IA-ENGINEER - D DIS-67864/2011/Y3
3Ds max Elevation Splst / Staadpro Analyst / CADD Drafter
Mobile : 9843235353. mayajothiassociates@gmail.com
6, Society Complex, Behind the Bus Stand, Thirumangalam.

Er.Vr.M.IRULANDI,
M.Tech.(struc), M.Sc.(REV), M.I.E., F.I.V., P.E.,
Regd. Structural Engineer-05/21(Gr-I) M D T C P
Chartered Engineer- M-1677408,
REGISTERED ENGINEER GRADE-I - 117/L S/2019/00010
Income tax (W T) Registered, Panel & Approved Valuer
C C I T Rg No-16/R V/15-16 & F-21330
PROFESSIONAL ENGINEER - PE/00008/17
DISTRICT PANEL CLASS-IA- ENGINEER - D Dis-67864/2011/Y3
3Ds Elevation Splst / StaadproAnalyst / CADD Drafter
mobile 9843235353 mayajothiassociates @ gmail.com
6.Society Complex, Behind the Bus stand, Thirumangalam

AND ASSOCIATES
Er.I.ARVINDRAJ., M.E.(Struc).,
Ar.I.ANUJA., B.Arch.,

THE LANDLENS SUITE

# Eight ways to know a piece of land before you pay for it.

This report covers one part of the picture. These cover the rest, drawn from the same government records, for any property in Tamil Nadu.

### LandLens One
Ask anything about a property and get an answer grounded in live government records, with the sources shown.
**/landlens/one**

### Verify My Land
Every record check run on one property and returned as a single report.
**/landlens/verify-my-land**

### Legal Opinion
An advocate's written opinion on the title, built on the records we pull for it.
**/landlens**

### One Map
Every layer on one map: the parcel, its boundary, zoning, water bodies and what sits around it.
**/landlens/one/map**

### PriceMap
What land actually changed hands for around this plot, taken from the registered deeds.
**/landlens/pricemap**

### Build Scope
What you are allowed to build here: floor space, height, coverage and setbacks.
**/landlens/build-scope**

### Property Tracker
Watch a property and hear about it when something new is registered against it.
**/landlens/property-tracker**

### Deal Room
Run the transaction in one place: documents, stamping, signatures and the parties.
**/landlens/deal-room**

FREE TOOLS · NO ACCOUNT NEEDED

# Twenty-four checks you can run yourself, at no cost.

## Records and verification

The registers themselves, read for you.

- Encumbrance Certificate
- Patta and Chitta
- Field Measurement Sketch
- EC Analyzer
- Bank charge check
- Court case search
- Seller background check
- Approval check by survey

## Value and duty

What it is worth and what it costs to register.

- Guideline value by street
- Guideline value by survey
- Stamp duty and registration fees
- Capital gains
- Floor space index
- Area unit converter

## Zoning and land use

What the plan says can happen on this land.

- Land use zone finder
- CMDA land use check
- Coastal regulation zone
- Master plan check
- Water bodies finder
- Airport height clearance

## Registers and directories

Who holds it, and which office keeps the record.

- Find your registering office
- Temple property check
- Waqf property check
- RERA register

**Every free tool**
/tools

**Services we run for you**
/services

**The LandLens suite**
/landlens/one

Verified RealEstate™

# Every claim in this document traces back to a government record.

- Legal opinions, due diligence and title verification
- Building plan, layout and sub-division approvals
- Completion and occupancy certificates, regularisation
- Escrow, negotiation and NRI property management
- Land survey, soil testing, architecture and construction

**Verified RealEstate**
3/350/2 Mettukuppam,
OMR Thoraipakkam,
Chennai 600 097, India
**hello@verified.realestate**
+91 9996 12 9996

Prepared from the registers named on the page each finding sits on. Where a register could not be read, this document says so in its place rather than leaving the gap to be read as a clean result.