PP APPROVAL RECORD

Planning Permission

Survey 532/4

Elumalai, ALAI AMMAN KOVIL STREET ELUMALAI PERAIYUR taluk

Madurai district, Tamil Nadu

APPROVAL TYPE
Building Plan

ISSUING AUTHORITY
Town Panchayat

The approval as the planning authority issued it, reproduced in full behind this page.

An approval speaks to what was sanctioned, not to what was built. Completion is a separate record.

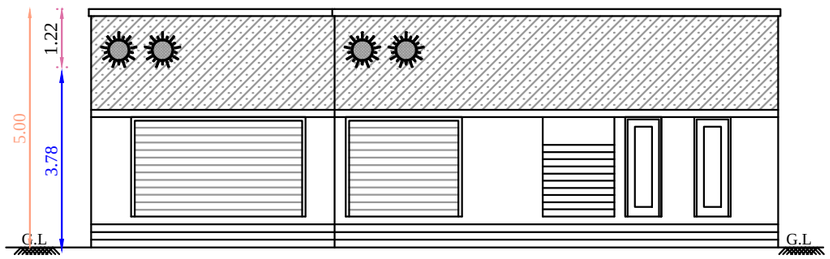

ELEVATION

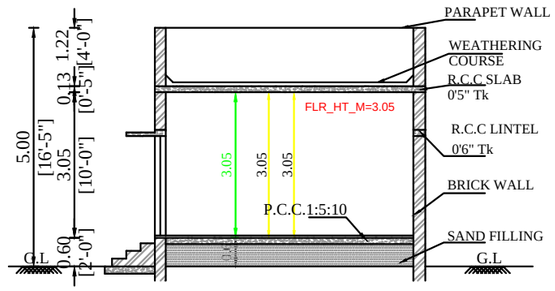

SECTION ON 'A-A'

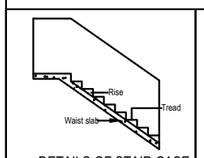

DETAILS OF STAIR CASE

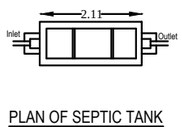

PLAN OF SEPTIC TANK

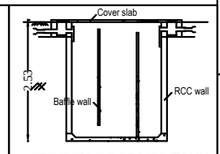

SECTION OF SEPTIC TANK

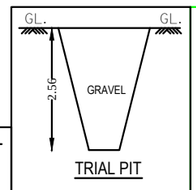

TRIAL PIT

NOT TO SCALE

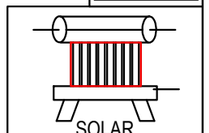

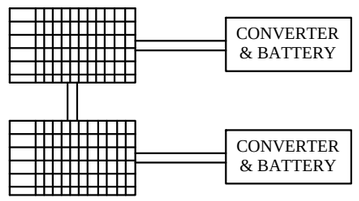

SOLAR ENERGY SYSTEM

COLOUR INDEX

SITE	:	GREEN
ROAD	:	YELLOW
PRO. BUILDING	:	RED
EXI. BUILDING	:	BROWN

JOINERY DETAILS:

RS	ROLLING SHUTTER	3.66 x 2.13	12'0" x 7'0"
RS1	ROLLING SHUTTER	2.44 x 2.13	8 '0" x 7'0"
D1	DOOR	0.76 x 2.10	2'6" x 7'0"
V	VENTILATOR	0.91 x 0.61	3'0" x 2'0"

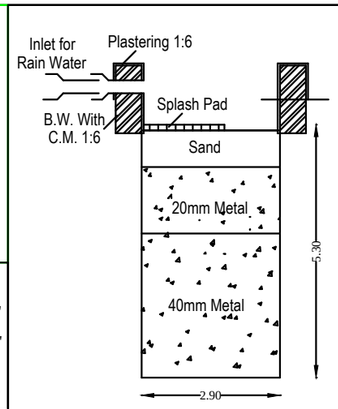

RAIN WATER PERCOLATION PIT

SITE PLAN
(NOT TO SCALE)

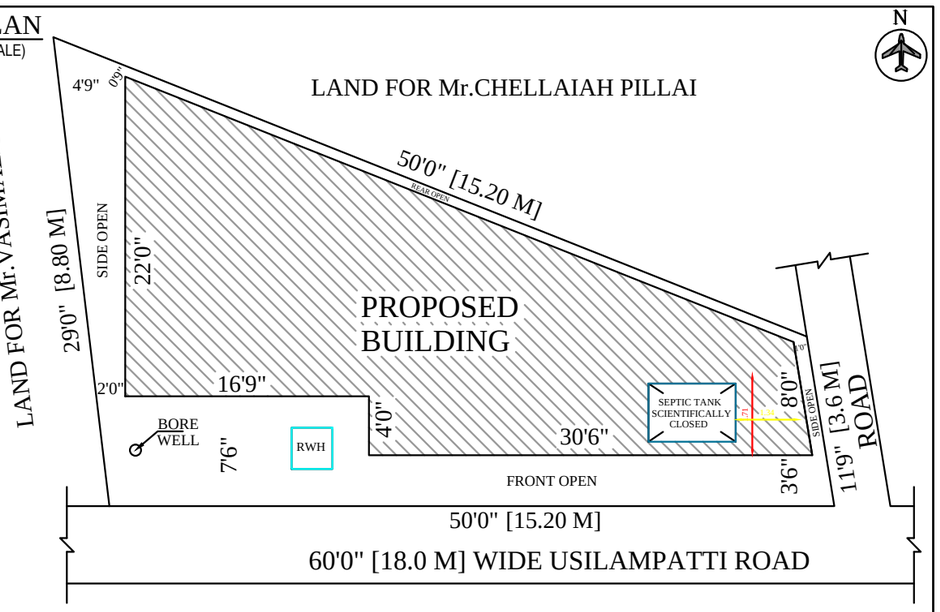

AREA DETAILS	F.S.I		NON F.S.I		TOTAL	
	(Sq.m)	(Sq.Ft)	(Sq.m)	(Sq.Ft)	(Sq.m)	(Sq.Ft)
SITE AREA (AS PER DOCUMENT) (2.495 Cents)					100.96	1086.76
GROUND FLOOR AREA	66.34	714.00	—	—	66.34	714.00
OPEN AREA	—	—	—	—	34.62	372.76
TOTAL	66.34	714.00	—	—	—	—

FLOOR SPACE INDEX = $\frac{66.34}{100.96}$ = 0.657 < 2.0%

CAR PARKING REQUIRED — 0 No
TWO WHEELER PARKING REQUIRED — 1 No

PLAN SHOWING THE PROPOSED CONSTRUCTION OF A COMMERCIAL BUILDING IN SURVEY NO: 532/4, PATTA NO: 5913, PATTA SURVEY NO: 532/4D, OLD WARD NO: 14, NEW WARD NO: 04, KATCHAKARIYAMMAN KOVIL STREET, ELUMALAI TOWN PANCHAYATH, PERAIYUR TALUK, MADURAI DISTRICT.

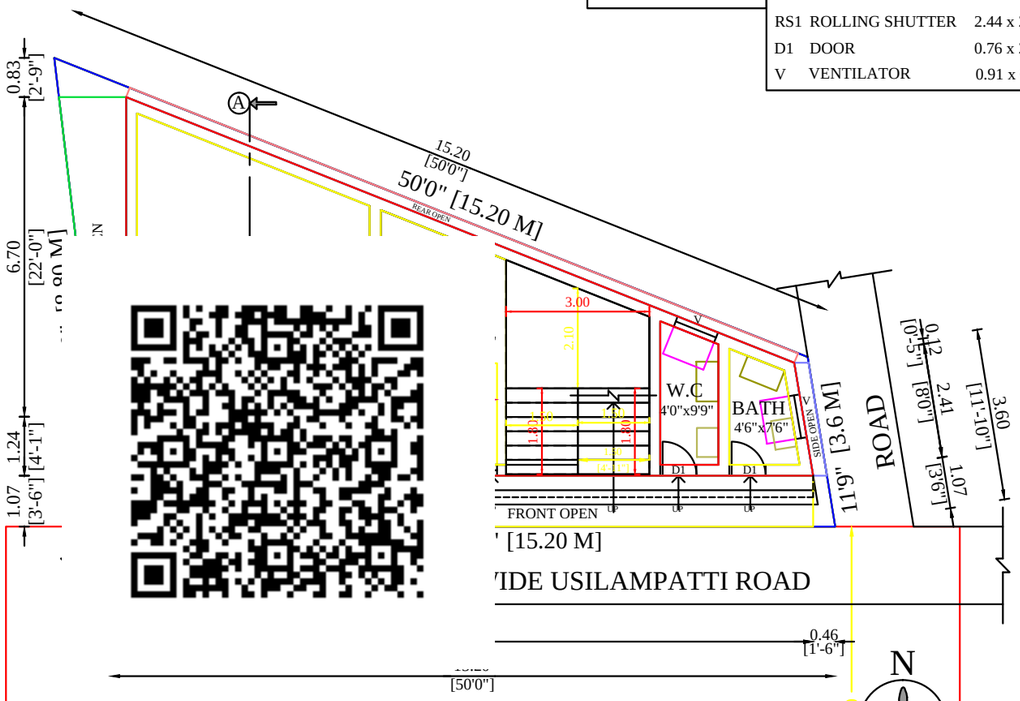

GROUND FLOOR PLAN

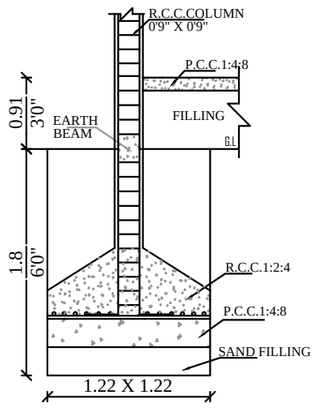

FOUNDATION DETAILS
NOT TO SCALE

SCALE: 1:100

Mr.S.DIVAN RAJA
NAME OF APPLICANT

Er.N.SETHU RAJAN., D.C.E., A.Cad.,
SETHU CONSTRUCTIONS
REGISTERED ENGINEER
(ELUMALAI TOWN PANCHAYATH)
REGISTERED ENGINEER(MDTCP Reg.no: RE(Gr.III)11/2022)
ELUMALAI MAIN BAZZAR, ELUMALAI,
CELL: +91 90039 83538,
E Mail id: nsethurajans@gmail.com

REGISTERED ENGINEER

PLAN INFO
SURVEY_NO= 532/4, 532/4 D
PATTA_NO=5913
TALUK=PERAIYUR
AS_AT_SITE=100.96
FMB_OR_PLR=100.96
PLOT_AREA_M2=100.96
AS_PER_DOCUMENT=100.96
OSR_APPLICABLE=NO
PREMIUM_FSI_REQUIRED=NO
IS_APPROVED_LAYOUT=NO
IS_SWIMMING_POOL_EXISTS=NO
PLOT NO=NO
DOOR NO=NO
DISTRICT=MADURAI
SINGLE_FAMILY_BLDG=YES
CRZ=NO
SECURITY_ZONE=NO
ACCESS_WIDTH_M=1.52
WHETHER_GOVT_OR_AIDED_SCHOOL=NO
ROAD_WIDTH=18.0
ROAD_LENGTH=200.00
AVG_PLOT_DEPTH=6.2
AVG_PLOT_WIDTH=15.2
LAND_USE_ZONE = COMMERCIAL
RWH_DECLARED=YES
BUILDING_NEAR_TO_RIVER=NO
AREA_TYPE=EWS
BUILDING_NEAR_MONUMENT=NO
BUILDING_NEAR_GOVT_BLDG=NO
NOC_FOR_CONSTRUCTION_NEAR_MONUMENT=NO
JURISDICTION_TYPE=PANCHAYAT
IF_HERITAGE_TOWN_LESSTHAN_1KM_RADIUS= NO
BLOCK_1_B-SHOP_MEMBER_COUNT=1

THE LANDLENS SUITE

Eight ways to know a piece of land before you pay for it.

This report covers one part of the picture. These cover the rest, drawn from the same government records, for any property in Tamil Nadu.

LandLens One
Ask anything about a property and get an answer grounded in live government records, with the sources shown.
/landlens/one

Verify My Land
Every record check run on one property and returned as a single report.
/landlens/verify-my-land

Legal Opinion
An advocate's written opinion on the title, built on the records we pull for it.
/landlens

One Map
Every layer on one map: the parcel, its boundary, zoning, water bodies and what sits around it.
/landlens/one/map

PriceMap
What land actually changed hands for around this plot, taken from the registered deeds.
/landlens/pricemap

Build Scope
What you are allowed to build here: floor space, height, coverage and setbacks.
/landlens/build-scope

Property Tracker
Watch a property and hear about it when something new is registered against it.
/landlens/property-tracker

Deal Room
Run the transaction in one place: documents, stamping, signatures and the parties.
/landlens/deal-room

FREE TOOLS · NO ACCOUNT NEEDED

Twenty-four checks you can run yourself, at no cost.

Records and verification

The registers themselves, read for you.

- Encumbrance Certificate
- Patta and Chitta
- Field Measurement Sketch
- EC Analyzer
- Bank charge check
- Court case search
- Seller background check
- Approval check by survey

Value and duty

What it is worth and what it costs to register.

- Guideline value by street
- Guideline value by survey
- Stamp duty and registration fees
- Capital gains
- Floor space index
- Area unit converter

Zoning and land use

What the plan says can happen on this land.

- Land use zone finder
- CMDA land use check
- Coastal regulation zone
- Master plan check
- Water bodies finder
- Airport height clearance

Registers and directories

Who holds it, and which office keeps the record.

- Find your registering office
- Temple property check
- Waqf property check
- RERA register

Every free tool
/tools

Services we run for you
/services

The LandLens suite
/landlens/one

Verified RealEstate™

Every claim in this document traces back to a government record.

- Legal opinions, due diligence and title verification
- Building plan, layout and sub-division approvals
- Completion and occupancy certificates, regularisation
- Escrow, negotiation and NRI property management
- Land survey, soil testing, architecture and construction

Verified RealEstate
3/350/2 Mettukuppam,
OMR Thoraipakkam,
Chennai 600 097, India
hello@verified.realestate
+91 9996 12 9996

Prepared from the registers named on the page each finding sits on. Where a register could not be read, this document says so in its place rather than leaving the gap to be read as a clean result.