PP APPROVAL RECORD

Planning Permission

Madurai district, Tamil Nadu

APPROVAL TYPE
Building Plan

ISSUING AUTHORITY
DTCP

The approval as the planning authority issued it, reproduced in full behind this page.

An approval speaks to what was sanctioned, not to what was built. Completion is a separate record.

Verified RealEstate™
3/350/2 Mettukuppam,
OMR Thoraipakkam,
Chennai 600 097, India

hello@verified.realestate
+91 9996 12 9996
verified.realestate

SITE PLAN SHOWING THE PROPOSED GROUND FLOOR CONSTRUCTION OF A COLD STORAGE BUILDING (UNDER GREEN CLASSIFICATION) IN S.No :119/8, 120/4 IN THANICHIYAM VILLAGE , VADUGAPATTI PANCHAYAT, ALANGANALLUR PANCHAYAT UNION, VADIPATTI TALUK, MADURAI DISTRICT.

N

SCALE 1: 100

SHEET:1/2

திட்ட அனுமதி

மனை ஒப்புதல் மற்றும் திட்ட அனுமதி

மதுரை உள்ளூர் திட்ட குழுமம், மதுரை-625017

ந.க.எண். SWP/BPA/884365/2026 உத்தரவில் கண்டுள்ளவாறு நிபந்தனைகளுக்கு உட்பட்டு A முதல் D வரை எல்லையிடப்பட்ட மனையிட ஒப்புதலும், கட்டிடத்திற்கு திட்ட அனுமதியும் அளிக்கப்படுகிறது.

ம.வ/ம.உ.தி.கு. எண்: 375/2026

திட்ட அனுமதி எண்: 398/2026

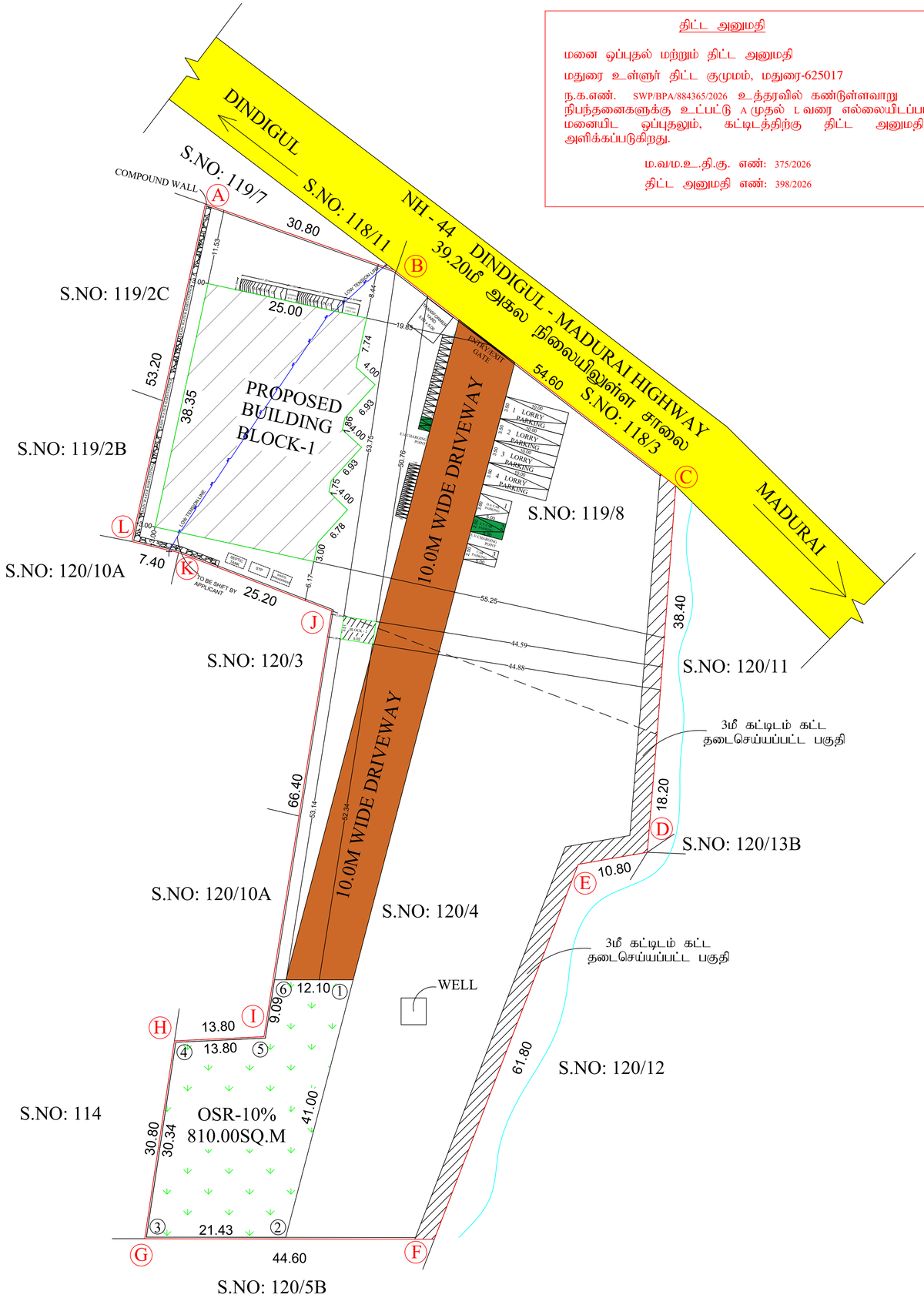

AREA DETAILS

(SITE AREA AS PER DOCUMENT)	=	8100.00 Sqm
(SITE AREA AS PER FMB)	=	8106.04 Sqm
(SITE AREA AS PER PATTA)	=	8100.00 Sqm

S.NO	BLOCK DETAILS	AREA DETAILS	TOTAL FSI AREA (SQ.M)	NON FSI AREA (SQ.M)	TOTAL BUILT UP AREA (SQ.M)
1	(BLOCK-1 COLD STORAGE) GROUNG FLOOR AREA		1000.00	-----	1000.00
2	(BLOCK-2 TOILET) GROUNG FLOOR AREA		17.62	-----	17.62
TOTAL AREA			1017.62	-----	1017.62

MAXIMUM ONE FLOOR AREA=1000.00 SQ.M

TOTAL COVERDE AREA ON ALL FLOORS / SITE AREA = 1017.62 / 8100.00 = 0.12< 2

PARKING DETAILES

VEHICLE	PARKING AREA DESCRIPTION	AREA IN (SQ.M)	REQUIRED NOS	PROVIDED NOS
LORRY	1 lorry space for every 500sq.m of plot area or part thereof	1017.62	2 NOS	4 NOS
CAR PARKING	1 Car Parking Space 75sq.m office area	——	1 NOS	3 NOS
T.W. PARKING	1 Two Wheeler Parking Space 50Sq.m	——	14 NOS	15 NOS
CYCLE PARKING	1 Cycle Parking Space 50Sq.m	——	14 NOS	15 NOS

OSR DETAILS	REQUIRED	PROVIDED
10% OSR AREA	810.00 SQ.M	810.00 SQ.M (10.00 %)

BLOCK - 1 HEIGHT OF BUILDING - 13.20 m
BLOCK - 2 HEIGHT OF BUILDING - 3.64 m

ALL DIMENSSIONS ARE IN METER

JOINERIES DETAILS IN METER

TYPE DESCRIPTION SIZE IN M

R.S	R.SHUTTER	2.44 X 3.05
R.S1	R.SHUTTER	3.00 X 3.05
D1	DOOR	0.91 X 2.13
D2	DOOR	0.76 X 2.13
W	WINDOW	1.52 X 1.22
W1	WINDOW	1.22 X 1.22
V	VENTILATOR	0.76 X 0.60
S.D	SLIDING DOOR	2.44 X 3.05
S.D1	SLIDINGDOOR	0.91 X 2.13

REFERENCE
- SITE BOUNDARY AS
- PROPOSED BUILDING
- EXISTING ROAD
- DRIVE WAY

SANITARY DETAILS : 54(2) (b)
NUMBER OF EMPLOYEEES MALE -15 NOS
NUMBER OF EMPLOYEEES FEMALE - 05 NOS
TOTAL NUMBER OF EMPLOYEES - 20 NOS

	DESCRIPTION		REQUIRED	PROVIDED
1	WATER CLOSET	MALE (1 PER 15 PERSONS)	1	2
		FEMALE (1 PER 12 PERSONS)	1	1
2	URINALS	MALE (1 PER 7-20 PERSONS)	1	3
3	WASH BASINS	MALE (1 PER 25 PERSONS)	1	2
4	CLEANERS SINK	1 PER 1 EACH FLOOR	1	2
5	DRINKING WATER	1 FOR 100 PERSONS	1	1

NOTE

1) DRINAGE TO BE CONNECTED WITH PUBLIC SEWER WITH NECESSARY PERMISSION

2) SOLAR WATER HEATING SYSTEM TO BE PROVIDED IN TERRACE FLOOR

3) R.W.H SYSTEM TO BE PROVIDED

4) STRUCTURE IS SAFE FOR EARTHQUAKE

5) FE:FIRE EXTINGUISHING SYSTEM PROVIDED IN ALL FLOORS

6) STP AND RECYCLING UNIT OF WATER TO BE PROVIDED IN THE SITE

7) E.A EXISTING ALARAM PROVIDED ALL FLOORS

8) ALL DIMENSIONS ARE IN METERS

APPLICANT

Er.N.RAMESH, B.E.,M.E.,MIE.,
REGISTERED ENGINEER GRADE - I
SK PLANNERS & ASSOCIATES Reg.No:03/2021)
MADURAI DISTRICT TOWN & COUNTRY PLANNING
No.14/12 Lajapathiroy Road
(Opp.Madurai Corporation West Entry Gate Road)
Chinna Chokkikulam, Madurai - 625002
Email: skplannersmdu@gmail.com
Off: 0452-3501275, 9344589161, 6385578969
9597599299,7998986969

ENGINEER

Er.S.SURENDAR, B.E., M.E., (Structures)
62, Alagampatti, Balakrishnapuram,
Dindigul - 624 005.
Mob : 63796 82087
REGISTERED STRUCTURAL ENGINEER
DINDIGUL LPA REG. No : SE 01 / 2023 (Gr-I)

ENGINEER

Er.K.GANAPATHI, B.E., M.E(Soil Mech), F.I.E., F.I.V., D.Litt.,(USA)
REGISTERED Geo-Tech Engineer / Chartered Engineer
(CMDA Regn No. GTE / 19 / 04 / 022)
(DTCP Regn No. CGLRGN RGTE / 2019 / 08 / 012)
(MLPA Regn No. GTE 002 / 2019)
GEOMATRIX CONSULTANCY, (Regn.No.330242233482E
No.22,Thomas Street, Narimedu,
Madurai - 625 002, Ph: 7598031360,7708758598
Email geomatrixconsultancy@gmail.com

ENGINEER

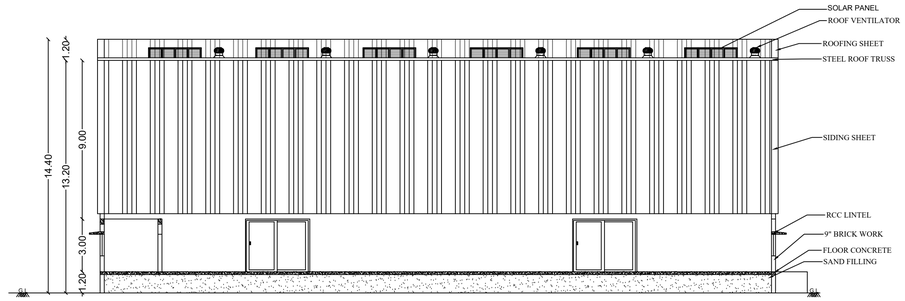

SECTION ON "A" - "A"

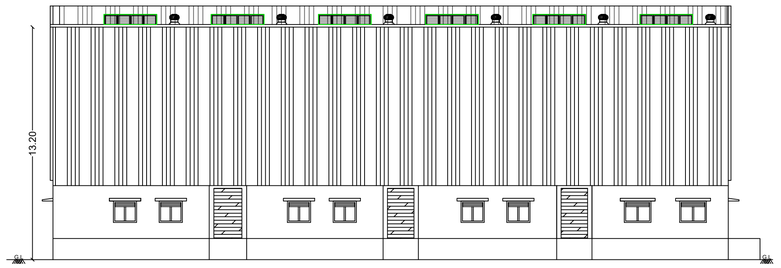

EAST SIDE ELEVATION

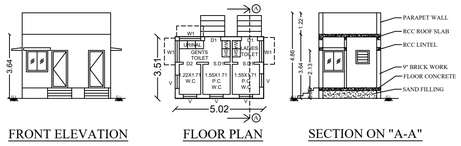

FRONT ELEVATION | FLOOR PLAN | SECTION ON "A-A"

BLOCK - 2

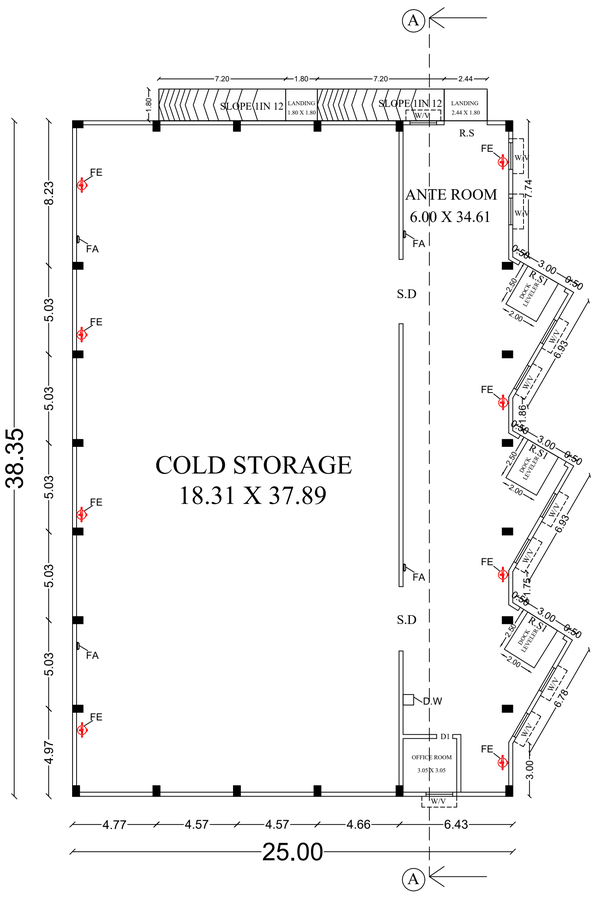

FLOOR PLAN

BLOCK - 1

திட்ட அனுமதி

மனை ஒப்புதல் மற்றும் திட்ட அனுமதி

மதுரை உள்ளுர் திட்ட குமுமம், மதுரை-625017

ந.க.எண். SWP/BPA/884365/2026 உத்தரவில் கண்டுள்ளவாறு நிபந்தனைகளுக்கு உட்பட்டு A முதல் L வரை எல்லையிடப்பட்ட மனையிட ஒப்புதலும், கட்டிடத்திற்கு திட்ட அனுமதியும் அளிக்கப்படுகிறது.

ம.வ/ம.உ.தி.கு. எண்: 375/2026

திட்ட அனுமதி எண்: 398/2026

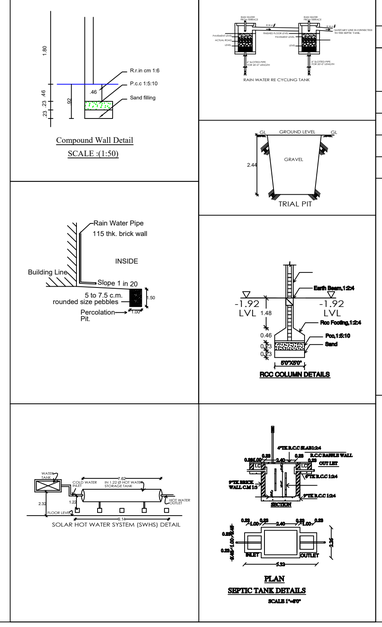

SITE PLAN SHOWING THE PROPOSED GROUND FLOOR CONSTRUCTION OF A COLD STORAGE BUILDING (UNDER GREEN CLASSIFICATION) IN S.No :119/8, 120/4 IN THANICHIYAM VILLAGE , VADUGAPATTI PANCHAYAT, ALANGANALLUR PANCHAYAT UNION, VADIPATTI TALUK, MADURAI DISTRICT.

N | SCALE 1: 100 | SHEET:2/2

AREA DETAILS

(SITE AREA AS PER DOCUMENT) = 8100.00 Sqm
(SITE AREA AS PER FMB) = 8106.04 Sqm
(SITE AREA AS PER PATTA) = 8100.00 Sqm

S.NO	BLOCK DETAILS	AREA DETAILS	TOTAL FSI AREA (SQ.M)	NON FSI AREA (SQ.M)	TOTAL BUILT UP AREA (SQ.M)
1	(BLOCK-1 COLD STORAGE) GROUNG FLOOR AREA		1000.00	-----	1000.00
2	(BLOCK-2 TOILET) GROUNG FLOOR AREA		17.62	-----	17.62
	TOTAL AREA		1017.62	-----	1017.62

MAXIMUM ONE FLOOR AREA=1000.00 SQ.M

TOTAL COVERDE AREA ON ALL FLOORS / SITE AREA = 1017.62 / 8100.00 = 0.12< 2

PARKING DETAILES

VEHICLE	PARKING AREA DESCRIPTION	AREA IN (SQ.M)	REQUIRED NOS	PROVIDED NOS
LORRY	1 lorry space for every 500sq.m of plot area or part thereof	1017.62	2 NOS	4 NOS
CAR PARKING	1 Car Parking Space 75sq.m office area	——	1 NOS	3 NOS
T.W. PARKING	1 Two Wheeler Parking Space 50Sq.m	——	14 NOS	15 NOS
CYCLE PARKING	1 Cycle Parking Space 50Sq.m	——	14 NOS	15 NOS

OSR DETAILS	REQUIRED	PROVIDED
10% OSR AREA	810.00 SQ.M	810.00 SQ.M (10.00 %)

BLOCK - 1 HEIGHT OF BUILDING - 13.20 m
BLOCK - 2 HEIGHT OF BUILDING - 3.64 m

ALL DIMENSSIONS ARE IN METER

JOINERIES DETAILS IN METER

TYPE DESCRIPTION SIZE IN M

R.S	R.SHUTTER	2.44 X 3.05
R.S1	R.SHUTTER	3.00 X 3.05
D1	DOOR	0.91 X 2.13
D2	DOOR	0.76 X 2.13
W	WINDOW	1.52 X 1.22
W1	WINDOW	1.22 X 1.22
V	VENTILATOR	0.76 X 0.60
S.D	SLIDING DOOR	2.44 X 3.05
S.D1	SLIDINGDOOR	0.91 X 2.13

REFERENCE
SITE BOUNDARY AS
PROPOSED BUILDING
EXISTING ROAD
DRIVE WAY

SANITARY DETAILS : 54(2) (b)
NUMBER OF EMPLOYEEES MALE -15 NOS
NUMBER OF EMPLOYEEES FEMALE - 05 NOS
TOTAL NUMBER OF EMPLOYEES - 20 NOS

	DESCRIPTION		REQUIRED	PROVIDED
1	WATER CLOSET	MALE (1 PER 15 PERSONS)	1	2
		FEMALE (1 PER 12 PERSONS)	1	1
2	URINALS	MALE (1 PER 7-20 PERSONS)	1	3
3	WASH BASINS	MALE (1 PER 25 PERSONS)	1	2
4	CLEANERS SINK	1 PER 1 EACH FLOOR	1	2
5	DRINKING WATER	1 FOR 100 PERSONS	1	1

NOTE

1) DRINAGE TO BE CONNECTED WITH PUBLIC SEWER WITH NECESSARY PERMISSION

2) SOLAR WATER HEATING SYSTEM TO BE PROVIDED IN TERRACE FLOOR

3) R.W.H SYSTEM TO BE PROVIDED

4) STRUCTURE IS SAFE FOR EARTHQUAKE

5) FE:FIRE EXTINGUISHING SYSTEM PROVIDED IN ALL FLOORS

6) STP AND RECYCLING UNIT OF WATER TO BE PROVIDED IN THE SITE

7) E.A EXISTING ALARAM PROVIDED ALL FLOORS

8) ALL DIMENSIONS ARE IN METERS

APPLICANT

Er.N.RAMESH, B.E.,M.E.,MIE.,
REGISTERED ENGINEER GRADE - I
SK PLANNERS & ASSOCIATES (Reg.No:03/2021)
MADURAI DISTRICT TOWN & COUNTRY PLANNING
No.14/12 Lajapathiroy Road
(Opp.Madurai Corporation West Entry Gate Road)
Chinna Chokkikulam, Madurai - 625002
Email: skplannersmdu@gmail.com
Off: 0452-3501275, 9344589161, 6385578969
9597599299,7993986969
ENGINEER

Er.S.SURENDAR, B.E., M.E., (Structures)
62, Alagampatti, Balakrishnapuram,
Dindigul - 624005.
Mob : 63796 82087
REGISTERED STRUCTURAL ENGINEER
DINDIGUL LPA REG. No : SE 01 / 2023 (Gr-I)
ENGINEER

Er.K.GANAPATHI,B.E.,M.E(Soil Mech),F.I.E.,F.I.V.,D.Litt.,(USA)
REGISTERED Geo-Tech Engineer / Chartered Engineer
(CMDA Regn No. GTE / 19 / 04 / 022)
(DTCP Regn No. CGLRGN RGTE / 2019 / 08 / 012)
(MLPA Regn No. GTE 002 / 2019)
GEOMATRIX CONSULTANCY, (Regn.No.330242233482E
No.22,Thomas Street, Narimedu,
Madurai - 625 002, Ph: 7598031360,7708758598
Email geomatrixconsultancy@gmail.com
ENGINEER

THE LANDLENS SUITE

Eight ways to know a piece of land before you pay for it.

This report covers one part of the picture. These cover the rest, drawn from the same government records, for any property in Tamil Nadu.

LandLens One
Ask anything about a property and get an answer grounded in live government records, with the sources shown.
/landlens/one

Verify My Land
Every record check run on one property and returned as a single report.
/landlens/verify-my-land

Legal Opinion
An advocate's written opinion on the title, built on the records we pull for it.
/landlens

One Map
Every layer on one map: the parcel, its boundary, zoning, water bodies and what sits around it.
/landlens/one/map

PriceMap
What land actually changed hands for around this plot, taken from the registered deeds.
/landlens/pricemap

Build Scope
What you are allowed to build here: floor space, height, coverage and setbacks.
/landlens/build-scope

Property Tracker
Watch a property and hear about it when something new is registered against it.
/landlens/property-tracker

Deal Room
Run the transaction in one place: documents, stamping, signatures and the parties.
/landlens/deal-room

FREE TOOLS · NO ACCOUNT NEEDED

Twenty-four checks you can run yourself, at no cost.

Records and verification

The registers themselves, read for you.

- Encumbrance Certificate
- Patta and Chitta
- Field Measurement Sketch
- EC Analyzer
- Bank charge check
- Court case search
- Seller background check
- Approval check by survey

Value and duty

What it is worth and what it costs to register.

- Guideline value by street
- Guideline value by survey
- Stamp duty and registration fees
- Capital gains
- Floor space index
- Area unit converter

Zoning and land use

What the plan says can happen on this land.

- Land use zone finder
- CMDA land use check
- Coastal regulation zone
- Master plan check
- Water bodies finder
- Airport height clearance

Registers and directories

Who holds it, and which office keeps the record.

- Find your registering office
- Temple property check
- Waqf property check
- RERA register

Every free tool
/tools

Services we run for you
/services

The LandLens suite
/landlens/one

Verified RealEstate™

Every claim in this document traces back to a government record.

- Legal opinions, due diligence and title verification
- Building plan, layout and sub-division approvals
- Completion and occupancy certificates, regularisation
- Escrow, negotiation and NRI property management
- Land survey, soil testing, architecture and construction

Verified RealEstate
3/350/2 Mettukuppam,
OMR Thoraipakkam,
Chennai 600 097, India
hello@verified.realestate
+91 9996 12 9996

Prepared from the registers named on the page each finding sits on. Where a register could not be read, this document says so in its place rather than leaving the gap to be read as a clean result.