Verified RealEstate™

REFERENCE
378/2025

ISSUED
10 December 2025

PP APPROVAL RECORD

Planning Permission

Survey 168/2C and 1 more

Pattinam

Namakkal district, Tamil Nadu

APPROVAL TYPE
Building Plan

ISSUING AUTHORITY
Town Panchayat

The approval as the planning authority issued it, reproduced in full behind this page.

An approval speaks to what was sanctioned, not to what was built. Completion is a separate record.

Verified RealEstate™
3/350/2 Mettukuppam,
OMR Thoraipakkam,
Chennai 600 097, India

hello@verified.realestate
+91 9996 12 9996
verified.realestate

THE PLAN SHOWING THE PROPOSED CONSTRUCTION OF R.C.C ROOF GROUND FLOOR COMMERCIAL BUILDING AT PATTANAM TOWN PANCHAYAT,SF.NO:168/2C, PATTA NO:1513, PLOT NO:1 IN AMMAN NAGAR, RASIPURAM TALUK, NAMAKKAL DISTRICT.

APPLICANT:MR.V.KARIKALAN S/O MR.VAITHILINGAM

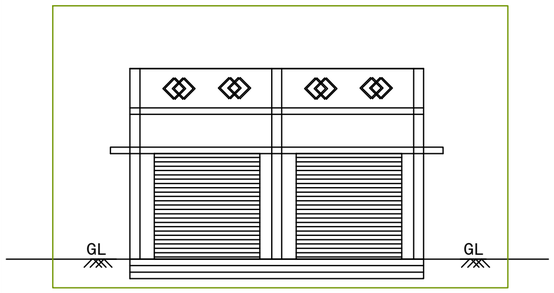

FRONT ELEVATION

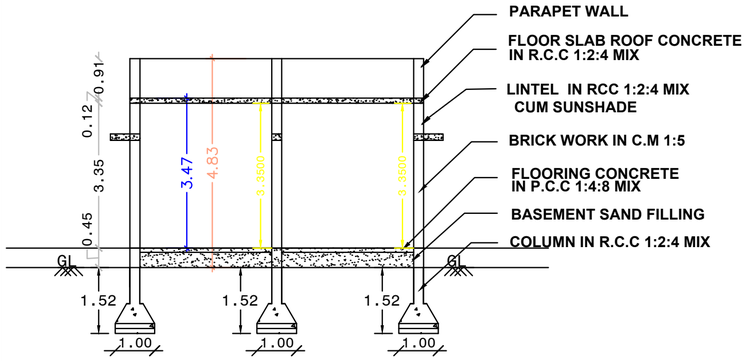

SECTION A-A

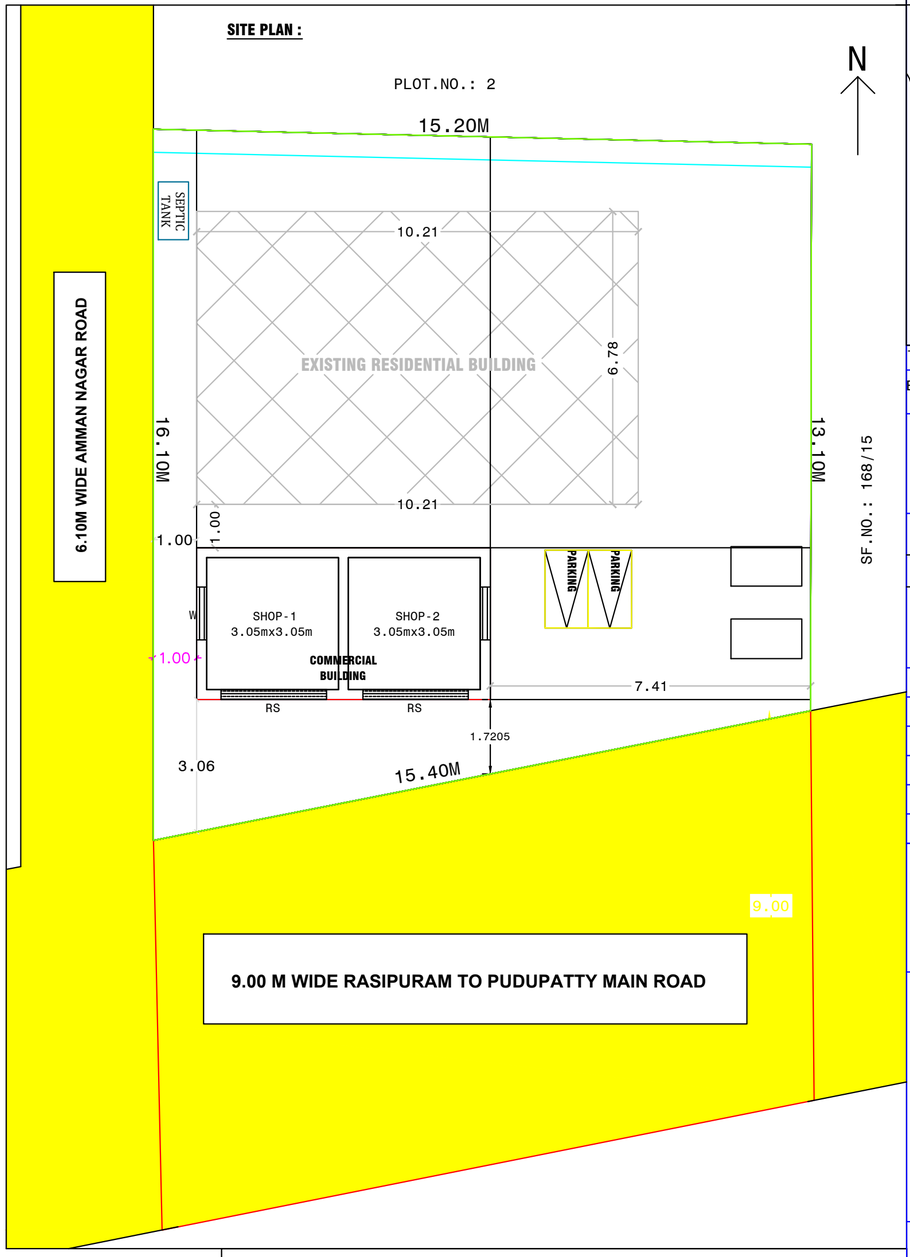

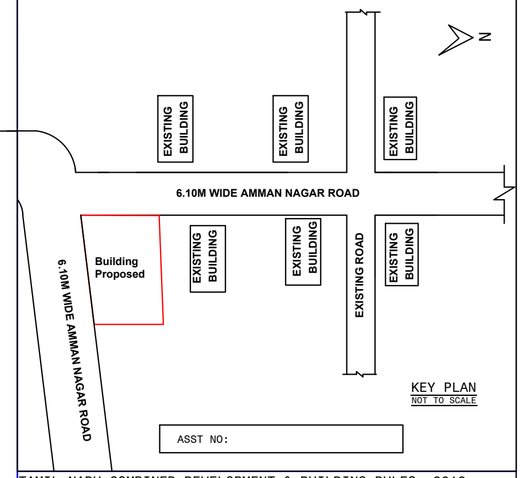

TAMIL NADU COMBINED DEVELOPMENT & BUILDING RULES, 2019

Building ht	Road wide	Plot Width	Details		Required	Available
4.83mt	9.00mt	Above 9.00 mt	35E(i)	Front set back	1.50	1.72
			35E(ii)	Side set back		
				Side 1	1.00	7.41
				Side 2	1.00	1.00
			35E(iii)	Rear set back	NIL	1.00

JOINERIES

REFERENCE	MT	FT
RS ROLLING SHUTTER	1.00 X 2.13	3'3" X 7'0"
W WINDOW	1.52 X 1.37	5'0" X 4'6"

COLOURS	AREA DETAILS	SQ.MT	SQ.FT
	SITE AREA	224.72	2418.75
	PROPOSED GF-COMMERCIAL	23.83	256.50
	EXISTING GF-RESIDENTIAL	69.22	745.12
	TOTAL BUILDUP AREA	93.05	1001.62
	OPEN SPACE	131.67	1417.13

F.S.I. = FLOOR AREA / SITE AREA F.S.I. = 93.05 / 224.70 = 0.41

0.41 < 2.00

PARKING CALCULATION

50 SQ.MT = NIL
50 SQ.MT -75 SQ.MT = 1 TWO WHEELER
75 SQ.MT -100 SQ.MT = 1 CAR SPACE FOR 2 DWELLINGS & 1 TWO WHEELER FOR EACH DWELLINGS
TWO WHEELER PARKING = 1 NOS

NOTES:-

- All dimensions are in metre & Scale -1:100
- Drinking water to be provided
- Solar water heating system to provided
- Perculation pit to be provided
- 'U' traps provided in septic tank to prevent curb breeding of mosquitoes

APPLICANT:-

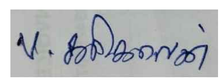

Mr.V.KARIKALAN
S/O Mr.VAITHILINGAM
4C/15 KUCHIKADU, PATTANAM POST,
RASIPURAM (TK),
NAMAKKAL (DT) - 637 408

ENGINEER:-

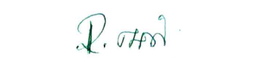

Er.R.EZHILARASAN,M.Tech.,
(Structural Engineer & Licensed Surveyor)
NITHYA ASSOCIATES
68/85, School Street, Pattanam,
Rasipuram, Namakkal - 637 408.
Cell : 97911 06761



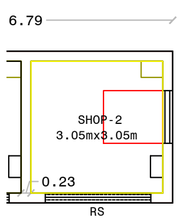

PROPOSED GROUND FLOOR PLAN

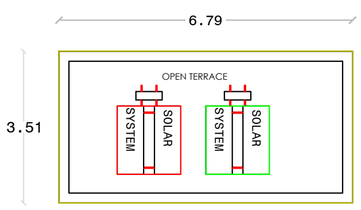

PROPOSED TERRACE FLOOR PLAN

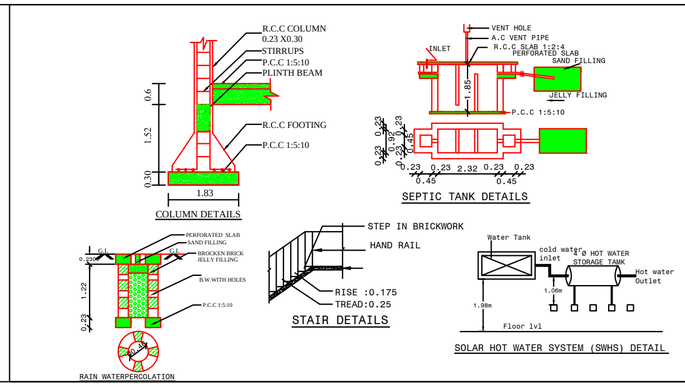

THE LANDLENS SUITE

Eight ways to know a piece of land before you pay for it.

This report covers one part of the picture. These cover the rest, drawn from the same government records, for any property in Tamil Nadu.

LandLens One
Ask anything about a property and get an answer grounded in live government records, with the sources shown.
/landlens/one

Verify My Land
Every record check run on one property and returned as a single report.
/landlens/verify-my-land

Legal Opinion
An advocate's written opinion on the title, built on the records we pull for it.
/landlens

One Map
Every layer on one map: the parcel, its boundary, zoning, water bodies and what sits around it.
/landlens/one/map

PriceMap
What land actually changed hands for around this plot, taken from the registered deeds.
/landlens/pricemap

Build Scope
What you are allowed to build here: floor space, height, coverage and setbacks.
/landlens/build-scope

Property Tracker
Watch a property and hear about it when something new is registered against it.
/landlens/property-tracker

Deal Room
Run the transaction in one place: documents, stamping, signatures and the parties.
/landlens/deal-room

FREE TOOLS · NO ACCOUNT NEEDED

Twenty-four checks you can run yourself, at no cost.

Records and verification

The registers themselves, read for you.

- Encumbrance Certificate
- Patta and Chitta
- Field Measurement Sketch
- EC Analyzer
- Bank charge check
- Court case search
- Seller background check
- Approval check by survey

Value and duty

What it is worth and what it costs to register.

- Guideline value by street
- Guideline value by survey
- Stamp duty and registration fees
- Capital gains
- Floor space index
- Area unit converter

Zoning and land use

What the plan says can happen on this land.

- Land use zone finder
- CMDA land use check
- Coastal regulation zone
- Master plan check
- Water bodies finder
- Airport height clearance

Registers and directories

Who holds it, and which office keeps the record.

- Find your registering office
- Temple property check
- Waqf property check
- RERA register

Every free tool
/tools

Services we run for you
/services

The LandLens suite
/landlens/one

Verified RealEstate™

Every claim in this document traces back to a government record.

- Legal opinions, due diligence and title verification
- Building plan, layout and sub-division approvals
- Completion and occupancy certificates, regularisation
- Escrow, negotiation and NRI property management
- Land survey, soil testing, architecture and construction

Verified RealEstate
3/350/2 Mettukuppam,
OMR Thoraipakkam,
Chennai 600 097, India
hello@verified.realestate
+91 9996 12 9996

Prepared from the registers named on the page each finding sits on. Where a register could not be read, this document says so in its place rather than leaving the gap to be read as a clean result.