Verified RealEstate™

REFERENCE
03/226162/2026-2027

ISSUED
14 October 2026

PP APPROVAL RECORD

Planning Permission

Survey 207

Pappampalayam

Namakkal district, Tamil Nadu

APPROVAL TYPE
Building Plan

ISSUING AUTHORITY
Rural Panchayat

The approval as the planning authority issued it, reproduced in full behind this page.

An approval speaks to what was sanctioned, not to what was built. Completion is a separate record.

Verified RealEstate™
3/350/2 Mettukuppam,
OMR Thoraipakkam,
Chennai 600 097, India

hello@verified.realestate
+91 9996 12 9996
verified.realestate

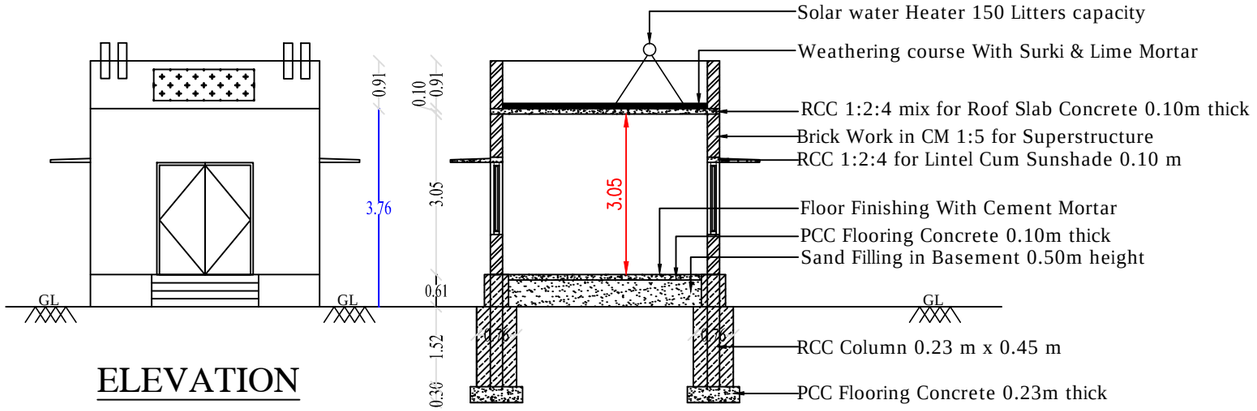

ELEVATION

SECTION ON "AB"

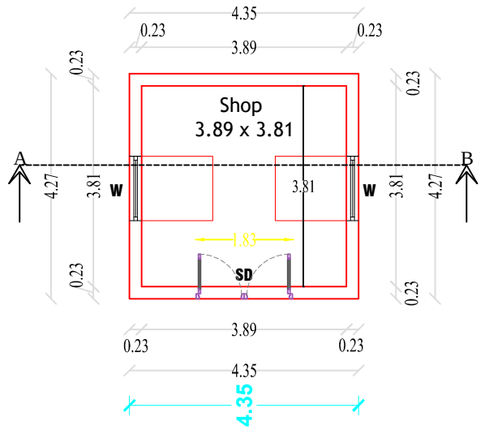

GROUND FLOOR PLAN

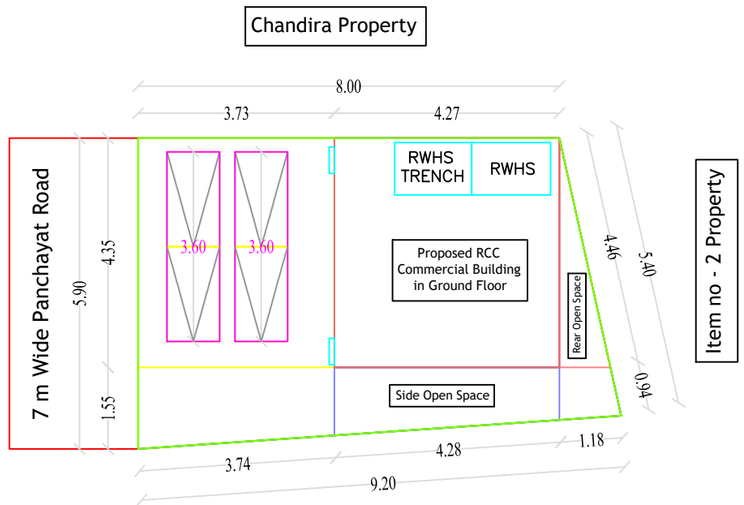

Natham New Survey No: 207/14, 207/13

SITE PLAN (SCALE 1:100)

PLAN INFO
PLOT_AREA_M2= 48.15
AS_AT_SITE=48.16
FMB_OR_PLB= 48.15
AS_PER_DOCUMENT= 50.00
SURVEY_NO= 207/9
PATTA_NO= 909
PREMIUM_FSI_REQUIRED=NO
BLOCK_1_B SHOP_MEMBER_COUNT=1
OSR_APPLICABLE=NO
OSR_SURR_BUYBACK_RETAIN=NOT APPICABLE
IS_APPROVED_LAYOUT=YES
SINGLE_FAMILY_BLDG=YES
CRZ=NO
SECURITY_ZONE=NO
ACCESS_WIDTH_M=50.00
WHETHER_GOVT_OR_AIDED_SCHOOL=NO
ROAD_WIDTH=7
ROAD_LENGTH=50.00
AVG_PLOT_DEPTH=6.6
AVG_PLOT_WIDTH=5.65
LAND_USE_ZONE=EUZ
PLOT_NO=
DISTRICT=NAMAKKAL
TALUK=KOMARAPALAYAM
RWH_DECLARED=YES
BUILDING_NEAR_TO_RIVER=NO
AREA_TYPE=OTHERS
BUILDING_NEAR_MONUMENT=NO
BUILDING_NEAR_GOVT_BLDG=NO
ORGANIZATION_TYPE=PRIVATE
PROVISION_FOR_GREEN_BUILDINGS_AND_SUSTAINABILITY=YES
FIRE_PROTECTION_AND_FIRE_SAFETY_REQUIREMENTS=YES
NOC_FOR_CONSTRUCTION_NEAR_MONUMENT=NO
NOC_FIRE_DEPT=YES
JURISDICTION_TYPE=PANCHAYAT
IS_SWIMMING_POOL_EXISTS=NO
IF_HERITAGE_TOWN_LESSTHAN_1KM_RADIUS=NO



Plan Showing the Proposed RCC Commercial Building Construction in Ground Floor at Natham.S.F.No: 207/9 , Natham Patta No: 909, in " Pappampalayam Village & Panchayat ", Komarapalayam Taluk , Namakkal District.

Applicant :-

Tmt.Soniya.W/o.(Late)Thiru.Ramesh.

AREA DETAILS	SQ.M	SQ.FT
Area of the Applicant Site (As on Document)	50.00	538.00
Area of the Proposed RCC Com.Building in G.F.	18.59	200.10
Carpet Area of Proposed RCC Com.Building in G.F	15.43	166.09
Area of the Open Space in G.F	31.41	337.90

JOINERY DETAILS:-

Main Door	MD	1.07 x 2.13 (3'6" x 7'0")	Door	D	0.91 x 2.13 (3'0" x 7'0")
Window	W	1.00 x 1.37 (6'0" x 4'6")	Opening	AO	1.37 x 2.13 (4'6" x 7'0")
Ventilator	V	0.91 x 0.61 (3'0" x 2'0")			

ALL DIMENSIONS ARE IN "METER"

ALL ROOMS ARE HAVING SUFFICIENT "VENTILATION"

U DROP WILL BE PROVIDED IN THE OUTLET

COLLECTION TANK WATER WILL BE REUSE TOILET & BATH ROOM OUTLET

SOLAR WATER HEATER SYSTEM OF 180LIT CAPACITY IS TO BE PROVIDED (1NOS)

INDEX:-

SCALE - 1:100

APPLICANT SITE BOUNDARY SHOWN IN

PROPOSED RCC BUILDING SHOWN IN

RWHS SHOWN IN

THE TUSKER CONSTRUCTIONS

BUILDERS & DEVELOPERS

Er.K.KAVIN.,B.E.,L.B.S.

REGISTERED CIVIL ENGINEER

NO-962-B Nellai Stores Building,
Anna Nagar , Kadachanallur , Namakkal - 638008.
Phone - 6369347927 / 7598851735.

பிறப்பொக்கும்! எல்லா உயிர்க்கும்!

APPLICANT	ENGINEER
M. சோனியா	Er.K. KAVIN, B.E.,LBS., Reg. Civil Engineer, Cell: 63693 47927, THE TUSKER CONSTRUCTIONS, No: 962-B, Nellai Stores Building, Anna Nagar, ERODE - 638 003.

THE LANDLENS SUITE

Eight ways to know a piece of land before you pay for it.

This report covers one part of the picture. These cover the rest, drawn from the same government records, for any property in Tamil Nadu.

LandLens One
Ask anything about a property and get an answer grounded in live government records, with the sources shown.
/landlens/one

Verify My Land
Every record check run on one property and returned as a single report.
/landlens/verify-my-land

Legal Opinion
An advocate's written opinion on the title, built on the records we pull for it.
/landlens

One Map
Every layer on one map: the parcel, its boundary, zoning, water bodies and what sits around it.
/landlens/one/map

PriceMap
What land actually changed hands for around this plot, taken from the registered deeds.
/landlens/pricemap

Build Scope
What you are allowed to build here: floor space, height, coverage and setbacks.
/landlens/build-scope

Property Tracker
Watch a property and hear about it when something new is registered against it.
/landlens/property-tracker

Deal Room
Run the transaction in one place: documents, stamping, signatures and the parties.
/landlens/deal-room

FREE TOOLS · NO ACCOUNT NEEDED

Twenty-four checks you can run yourself, at no cost.

Records and verification

The registers themselves, read for you.

- Encumbrance Certificate
- Patta and Chitta
- Field Measurement Sketch
- EC Analyzer
- Bank charge check
- Court case search
- Seller background check
- Approval check by survey

Value and duty

What it is worth and what it costs to register.

- Guideline value by street
- Guideline value by survey
- Stamp duty and registration fees
- Capital gains
- Floor space index
- Area unit converter

Zoning and land use

What the plan says can happen on this land.

- Land use zone finder
- CMDA land use check
- Coastal regulation zone
- Master plan check
- Water bodies finder
- Airport height clearance

Registers and directories

Who holds it, and which office keeps the record.

- Find your registering office
- Temple property check
- Waqf property check
- RERA register

Every free tool
/tools

Services we run for you
/services

The LandLens suite
/landlens/one

Verified RealEstate™

Every claim in this document traces back to a government record.

- Legal opinions, due diligence and title verification
- Building plan, layout and sub-division approvals
- Completion and occupancy certificates, regularisation
- Escrow, negotiation and NRI property management
- Land survey, soil testing, architecture and construction

Verified RealEstate
3/350/2 Mettukuppam,
OMR Thoraipakkam,
Chennai 600 097, India
hello@verified.realestate
+91 9996 12 9996

Prepared from the registers named on the page each finding sits on. Where a register could not be read, this document says so in its place rather than leaving the gap to be read as a clean result.