Verified RealEstate™

REFERENCE
9/2024-2025

ISSUED
12 November 2024

PP APPROVAL RECORD

Planning Permission

Pudukkottai district, Tamil Nadu

APPROVAL TYPE
Building Plan

ISSUING AUTHORITY
Rural Panchayat

The approval as the planning authority issued it, reproduced in full behind this page.

An approval speaks to what was sanctioned, not to what was built. Completion is a separate record.

Verified RealEstate™
3/350/2 Mettukuppam,
OMR Thoraipakkam,
Chennai 600 097, India

hello@verified.realestate
+91 9996 12 9996
verified.realestate

DIGITALLY VERIFIED RECORD

PLAN SHOWING THE PROPOSED CONSTRUCTION OF R.C.C ROOF GROUND AND FIRST FLOOR COMMERCIAL BUILDING IN SURVEY NUMBER :150/7B,150,7C,PATTA NO:1248 AT ILLANJAVUR VILLAGE AND RURAL PANCHAYAT,THIRUMAIYAM TALUK AND PUDUKKOTTAI DISTRICT.

OWNER NAME :Mrs.SUMATHI W/o SURESH

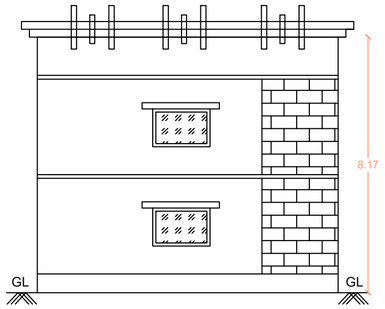

ELEVATION

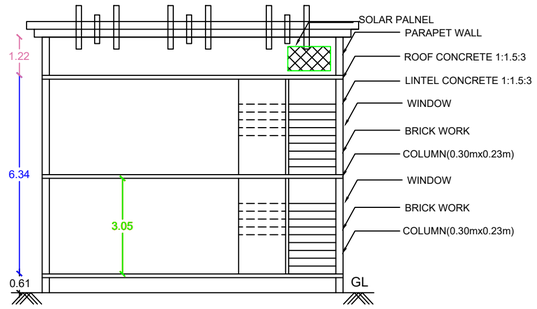

SECTION ON A-B

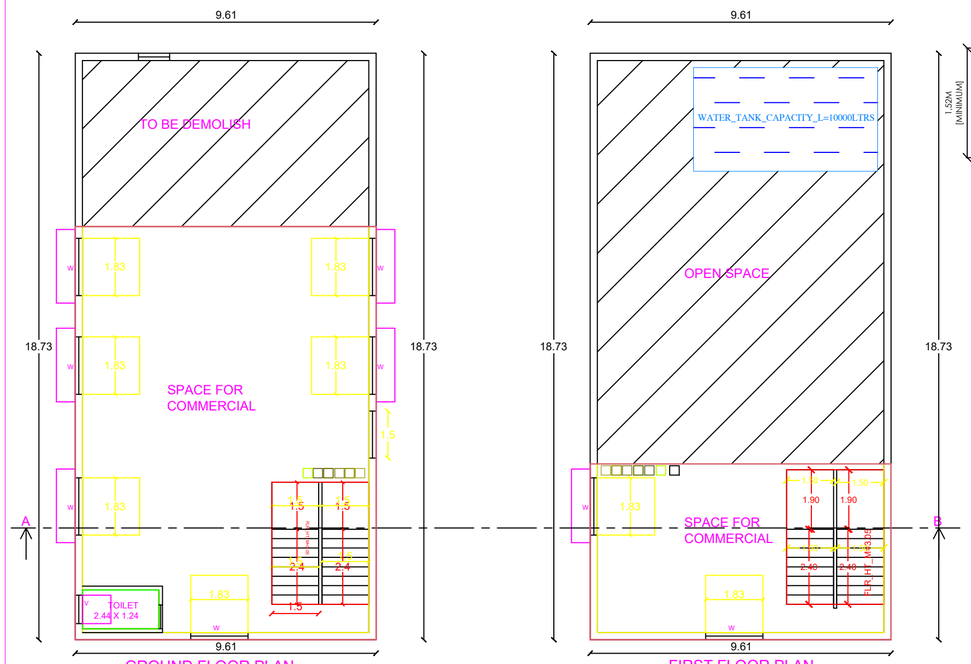

GROUND FLOOR PLAN

FIRST FLOOR PLAN

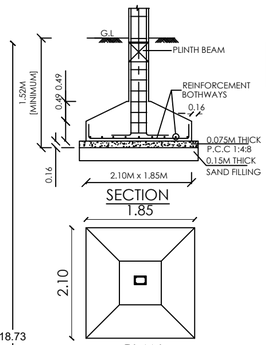

FOUNDATION DETAILS

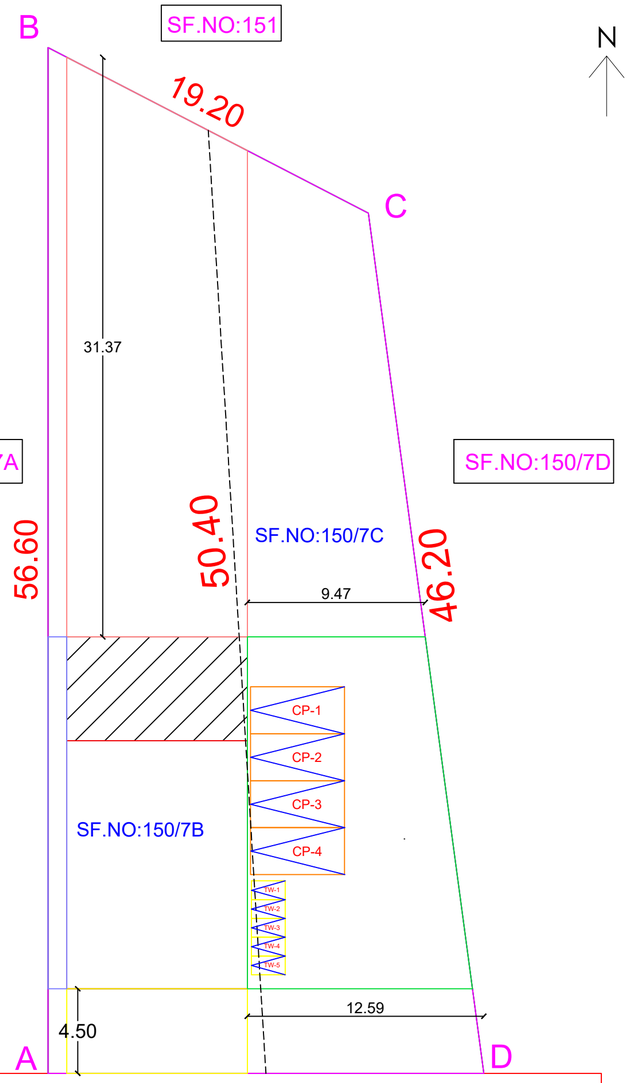

SITE PLAN
1:100

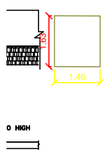

Compound wall Detail

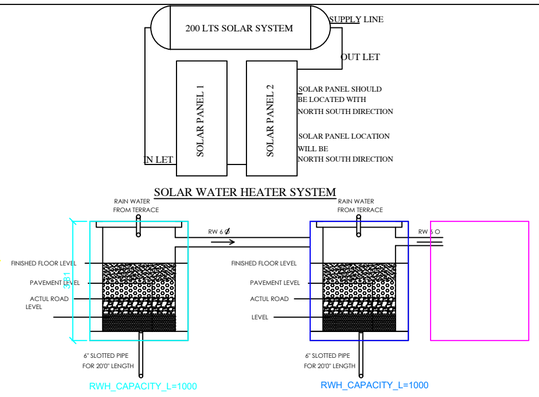

SOLAR WATER HEATER SYSTEM

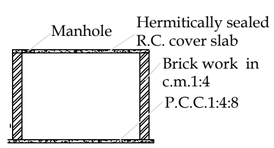

Section On
'Y-Y'

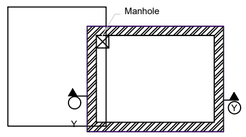

Sump Detail - Plan
SUMP_CAPACITY_L=1000LTRS

LEGEND

PARKING DETAILS

DESCRIPTION	REQUIRED	PROVIDED
CAR PARKING SPACE	1	4
TWO WHEELER PARKING SPACE	1	5

F.S.I = 180.82 / 1050.00 = 0.172

PLOT COVERAGE = $\frac{126.83}{1050.00} \times 100$ = 17.22 %

ALL DIMENSION ARE METER
SCALE 1: 100

SCHEDULE OF JOINERIES:

Short.ct	Description	Dimension(m)
M.D	Main Door	1.07 x 2.13
D	Door	0.91 x 2.13
D1	Toilet/bath Door	0.76 x 2.13
W	Window	1.21 x 1.21
W1	Window	1.52 x 1.52
W2	Window	0.91 x 1.21
K.W	Kitchen Window	1.21 x 1.21
V	Ventilator	0.91 x 0.91

Note:

1.Waste water used for kitchen garden purpose
2. Solar water heater to be Provided
3. Exhaust fan used for kitchen
4. Rain water Storage Tank to be Provided
5.Septic tank dispersion trench to be Provided
6.Excluding corridor & staircase 5% of Plinth Area.
7.Fire Resistance to be provided
8.Emergency alarm to be provided
9.Drinking water to be provided
10.Solid waste tub to be Provided
11.Waste water from recycled water tank & Trench connected to sullage disposal tank.
12.'U' traps provided in septictank to prevent curb breeding of mosquitoes.

SL.NO	DESCRIPTION	Sq.ft	Sq.mt
1	Area of site		
Super Imposed plot Area		10729.87	996.83
Document Area		11302.20	1050.00
FMB/PLR Plot Extent		11302.20	1050.00
2	Ground Floor	1365.19	126.83
3	First Floor	581.14	53.99
4	vacant Area	9364.68	870.00

S. Sumathi

Applicant

OWNER NAME :Mrs.SUMATHI W/o SURESH

Er.S.Victor Jebaraj,M.E.MBA.Ph.D.,
DTCP Reg. Structural Engineer (RSE) Grade – I
Reg. No: DTCP/SE/GR-1/20/10/002
DTCP Approved Construction Engineer (CE)
Reg. No: DTCP/CE/ 21/12/005
Reg Structural Engineer (SE)- 109/L/S/2019/00034
Reg. Engineer (RE)- 109/L/S/2019/00005
Plot No:44, Sowgamacchi Nagar,
Maliyandi, Pudukkottai - 622 003.
Email: vjbuilders2012@gmail.com Cell : 73737 16167

Er.S.Victor Jebaraj , ME(Stru).,MBA(PM)..Ph.D*
Contact : 73737 16167 Email : vjbuilders2012@gmail.com
DTCP Approved Structural Engineer Grade - 1 (RSE)
Licence No. : SE/GR-1/20/10/002
DTCP Approved Construction Engineer (CE)
Licence No. : DTCP/CE/21/12/005
Reg. Structural Engineer Licence No. : 109/L/S/2019/00034
Reg. Engineer Licence No. : 109/L/S/2019/00005
VJ BUILDERS

REGISTER ENGINEER / REGISTER STRUCTURAL ENGINEER

THE LANDLENS SUITE

Eight ways to know a piece of land before you pay for it.

This report covers one part of the picture. These cover the rest, drawn from the same government records, for any property in Tamil Nadu.

LandLens One
Ask anything about a property and get an answer grounded in live government records, with the sources shown.
/landlens/one

Verify My Land
Every record check run on one property and returned as a single report.
/landlens/verify-my-land

Legal Opinion
An advocate's written opinion on the title, built on the records we pull for it.
/landlens

One Map
Every layer on one map: the parcel, its boundary, zoning, water bodies and what sits around it.
/landlens/one/map

PriceMap
What land actually changed hands for around this plot, taken from the registered deeds.
/landlens/pricemap

Build Scope
What you are allowed to build here: floor space, height, coverage and setbacks.
/landlens/build-scope

Property Tracker
Watch a property and hear about it when something new is registered against it.
/landlens/property-tracker

Deal Room
Run the transaction in one place: documents, stamping, signatures and the parties.
/landlens/deal-room

hello@verified.realestate · +91 9996 12 9996

FREE TOOLS · NO ACCOUNT NEEDED

Twenty-four checks you can run yourself, at no cost.

Records and verification

The registers themselves, read for you.

- Encumbrance Certificate
- Patta and Chitta
- Field Measurement Sketch
- EC Analyzer
- Bank charge check
- Court case search
- Seller background check
- Approval check by survey

Value and duty

What it is worth and what it costs to register.

- Guideline value by street
- Guideline value by survey
- Stamp duty and registration fees
- Capital gains
- Floor space index
- Area unit converter

Zoning and land use

What the plan says can happen on this land.

- Land use zone finder
- CMDA land use check
- Coastal regulation zone
- Master plan check
- Water bodies finder
- Airport height clearance

Registers and directories

Who holds it, and which office keeps the record.

- Find your registering office
- Temple property check
- Waqf property check
- RERA register

Every free tool
/tools

Services we run for you
/services

The LandLens suite
/landlens/one

Verified RealEstate™

Every claim in this document traces back to a government record.

- Legal opinions, due diligence and title verification
- Building plan, layout and sub-division approvals
- Completion and occupancy certificates, regularisation
- Escrow, negotiation and NRI property management
- Land survey, soil testing, architecture and construction

Verified RealEstate
3/350/2 Mettukuppam,
OMR Thoraipakkam,
Chennai 600 097, India
hello@verified.realestate
+91 9996 12 9996

Prepared from the registers named on the page each finding sits on. Where a register could not be read, this document says so in its place rather than leaving the gap to be read as a clean result.