PP APPROVAL RECORD

Planning Permission

Survey 50/6 and 1 more

Sarukani

Sivagangai district, Tamil Nadu

APPROVAL TYPE
Building Plan

ISSUING AUTHORITY
Rural Panchayat

The approval as the planning authority issued it, reproduced in full behind this page.

An approval speaks to what was sanctioned, not to what was built. Completion is a separate record.

Verified RealEstate™

3/350/2 Mettukuppam,
OMR Thoraipakkam,
Chennai 600 097, India

hello@verified.realestate

+91 9996 12 9996

verified.realestate

PLAN SHOWING THE PROPOSED CONSTRUCTION OF R.C.C RESIDENTIAL GROUND FLOOR BUILDING AND FIRST FLOOR COMMERCIAL SHOP IN S.NO:- 50/6,

IN PATTA NO:-490,AT SARUGANI VILLAGE,MARANI SARUGANI GROUP,OF SARUGANI PANCHAYAT,DEVAKOTTAI UNION AND TALUK,SVAGANGAI

DISTRICT,TAMILNADU.

Owner Name: Mrs. SELVARANI, W/O :- Mr. JOSEPH ADAIKALA RAJA

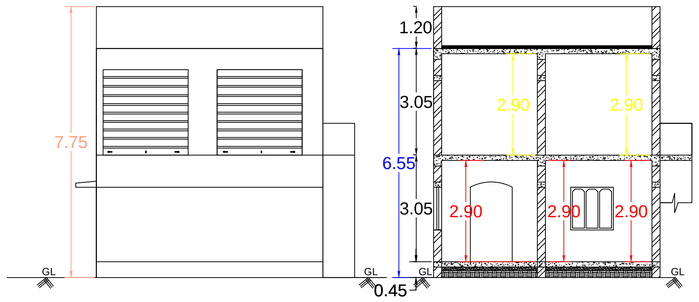

ELEVATION

SECTION ON 'AA'

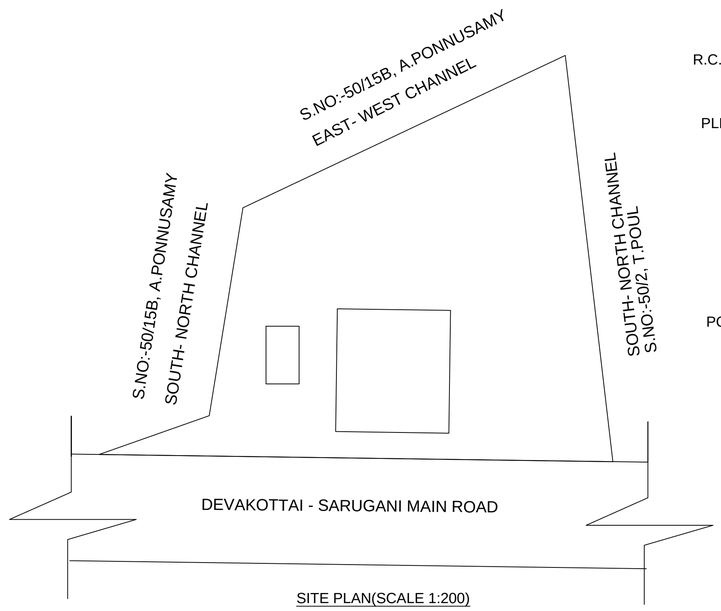

SITE PLAN(SCALE 1:200)

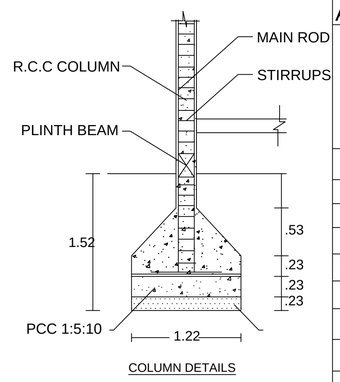

COLUMN DETAILS

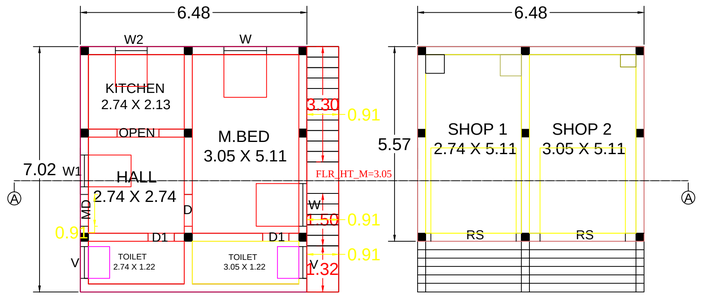

GROUND FLOOR PLAN FIRST FLOOR PLAN

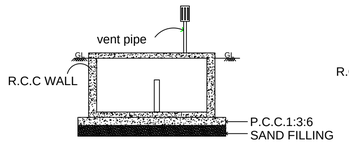

SECTION ON DD

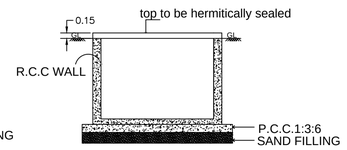

SECTION ON BB

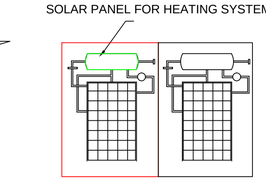

SOLAR HAETING SYSYTEM

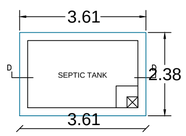

PLAN OF SEPTIC TANK

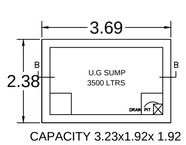

PLAN OF SUMP

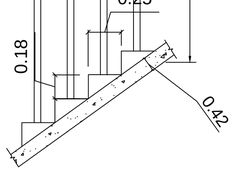

SECTION OF STAIRCASE

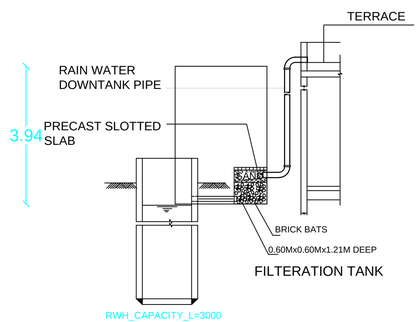

RAIN WATER HARVESTING SYSTEM

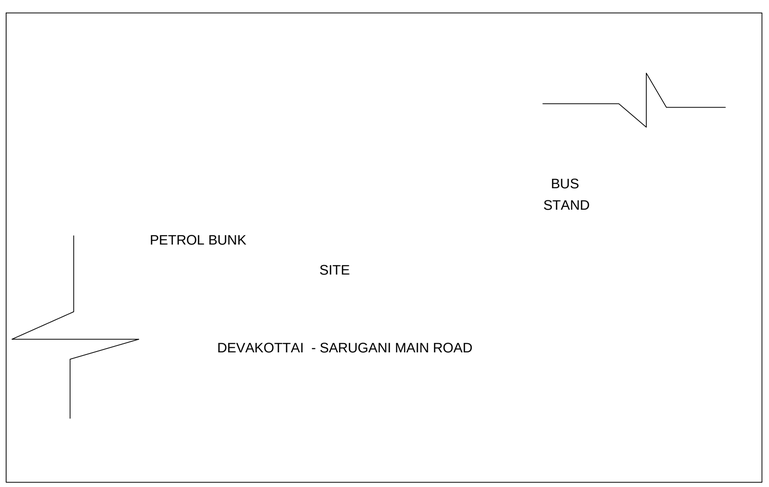

KEY PLAN (not to scale)

N

All dimensions are in 'metres' (scale 1 : 100)

1.WASTE WATER FROM KITCHEN AND WASH WILL BE REACHARGED IN R.W.H AS PER BUILDING RULE NO.17A

2.'U' TRAP WILL BE PROVIDED IN ALL THE OUTLETS

3.ALL SEWAGE LINE TO BE CONNECTED TO THE EXG UGS

Reference	Meter
MD - MAIN DOOR	1.07 X 2.13
D - DOOR	1.00 X 2.13
D1 - DOOR	0.76 X 2.13
W - WINDOW	1.22 X 1.22
W1 - WINDOW	0.91 X 1.22
W1 - WINDOW	0.91 X 0.91
V - VENTILATOR	0.91 X 0.61
RS - ROLLING SHUTTER	2.44 X 2.44

Applicant:

Engineer:

Rtn. PHF. Er. M. RAVIKUMAR, B.E.,AIV.,
PROPRIETOR
SRI KUMARAN CONSTRUCTION
REGISTERED CIVIL ENGINEER GRADE - 1(RE)
REGISTERED CONSTRUCTION ENGINEER (CE)
REGISTERED VALUER IBBI IOV RVF
OFF: MANIMEHALAI COMPLEX 1st FLOOR, RAMNAGAR,DVK
RES: AMARAVATHIPUDUR, 630 301
PH: 04561 - 261614, CELL: 94437 05614, 63798 56360
Email: srikumaranbuilder@gmail.com

AREA DETAILS	SQ.M	SQ.FT
Total Site Area (as per Patta)	400.00	4305.56
Total Site Area (as per document)	400.00	4305.56
Proposed Ground Floor	51.88	558.43
Proposed First Floor	36.09	388.47
Free Space	348.12	3747.13

F.S.I AREA	87.97	PLOT COVERAGE	12.97%
NON F.S.I AREA	-		

THE LANDLENS SUITE

Eight ways to know a piece of land before you pay for it.

This report covers one part of the picture. These cover the rest, drawn from the same government records, for any property in Tamil Nadu.

LandLens One
Ask anything about a property and get an answer grounded in live government records, with the sources shown.
/landlens/one

Verify My Land
Every record check run on one property and returned as a single report.
/landlens/verify-my-land

Legal Opinion
An advocate's written opinion on the title, built on the records we pull for it.
/landlens

One Map
Every layer on one map: the parcel, its boundary, zoning, water bodies and what sits around it.
/landlens/one/map

PriceMap
What land actually changed hands for around this plot, taken from the registered deeds.
/landlens/pricemap

Build Scope
What you are allowed to build here: floor space, height, coverage and setbacks.
/landlens/build-scope

Property Tracker
Watch a property and hear about it when something new is registered against it.
/landlens/property-tracker

Deal Room
Run the transaction in one place: documents, stamping, signatures and the parties.
/landlens/deal-room

FREE TOOLS · NO ACCOUNT NEEDED

Twenty-four checks you can run yourself, at no cost.

Records and verification

The registers themselves, read for you.

- Encumbrance Certificate
- Patta and Chitta
- Field Measurement Sketch
- EC Analyzer
- Bank charge check
- Court case search
- Seller background check
- Approval check by survey

Value and duty

What it is worth and what it costs to register.

- Guideline value by street
- Guideline value by survey
- Stamp duty and registration fees
- Capital gains
- Floor space index
- Area unit converter

Zoning and land use

What the plan says can happen on this land.

- Land use zone finder
- CMDA land use check
- Coastal regulation zone
- Master plan check
- Water bodies finder
- Airport height clearance

Registers and directories

Who holds it, and which office keeps the record.

- Find your registering office
- Temple property check
- Waqf property check
- RERA register

Every free tool
/tools

Services we run for you
/services

The LandLens suite
/landlens/one

Verified RealEstate™

Every claim in this document traces back to a government record.

- Legal opinions, due diligence and title verification
- Building plan, layout and sub-division approvals
- Completion and occupancy certificates, regularisation
- Escrow, negotiation and NRI property management
- Land survey, soil testing, architecture and construction

Verified RealEstate
3/350/2 Mettukuppam,
OMR Thoraipakkam,
Chennai 600 097, India
hello@verified.realestate
+91 9996 12 9996

Prepared from the registers named on the page each finding sits on. Where a register could not be read, this document says so in its place rather than leaving the gap to be read as a clean result.