PP APPROVAL RECORD

Planning Permission

Tenkasi district, Tamil Nadu

APPROVAL TYPE
Building Plan

ISSUING AUTHORITY
Rural Panchayat

The approval as the planning authority issued it, reproduced in full behind this page.

An approval speaks to what was sanctioned, not to what was built. Completion is a separate record.

PLAN SHOWING THE PROPOSED NEW CONSTRUCTION OF GROUND AND FIRST FLOOR SHOP BUILDING IN SURVEY NO : 389/5C ,PATTA NO:2015, WARD NO:10 AT PULI SITHAR STREET, SAMATHANAPURAM , KULASEKARAPATTI VILLAGE AND PANCHAYAT, KEELAPAVOOR UNION ALANGULAM TK,TENKASI DIST.

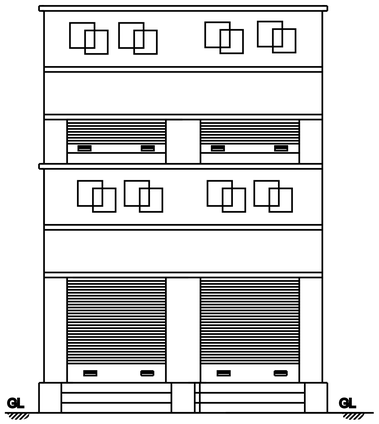

ELEVATION

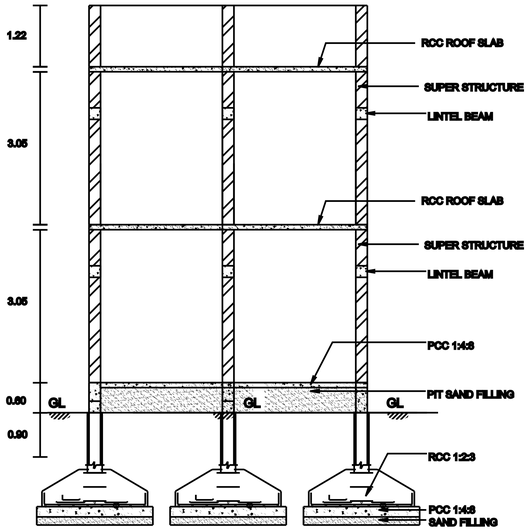

SECTION ON AB

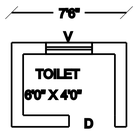

TOILET

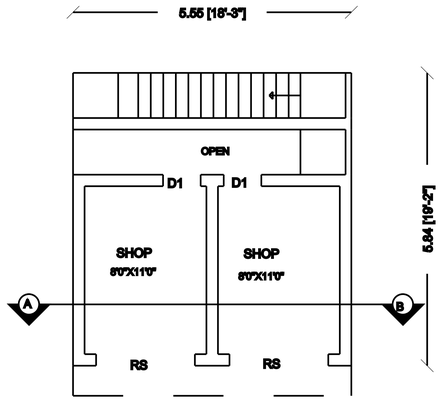

GROUND FLOOR PLAN

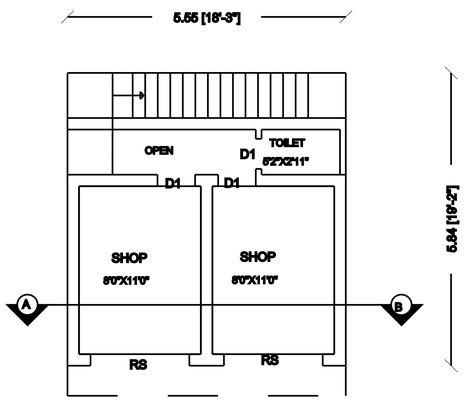

FIRST FLOOR PLAN

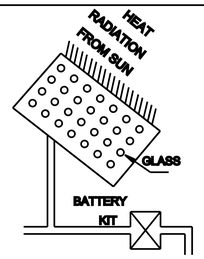

SOLAR SYSTEM

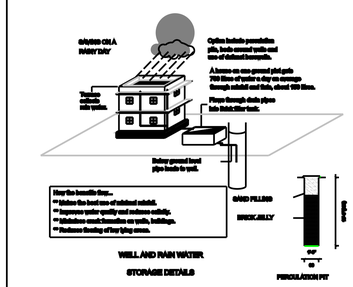

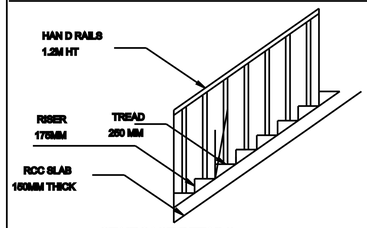

STAIRCASE DETAILS
SCALE 1:50

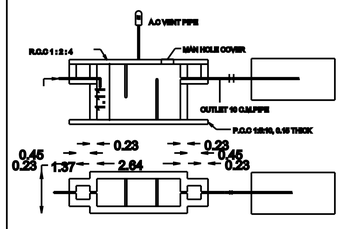

SEPTIC TANK & TRENCH

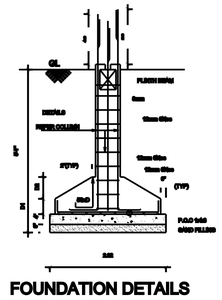

FOUNDATION DETAILS
SCALE : 1:50.

TOPO PLAN/ SITE PLAN
NOT TO SCALE

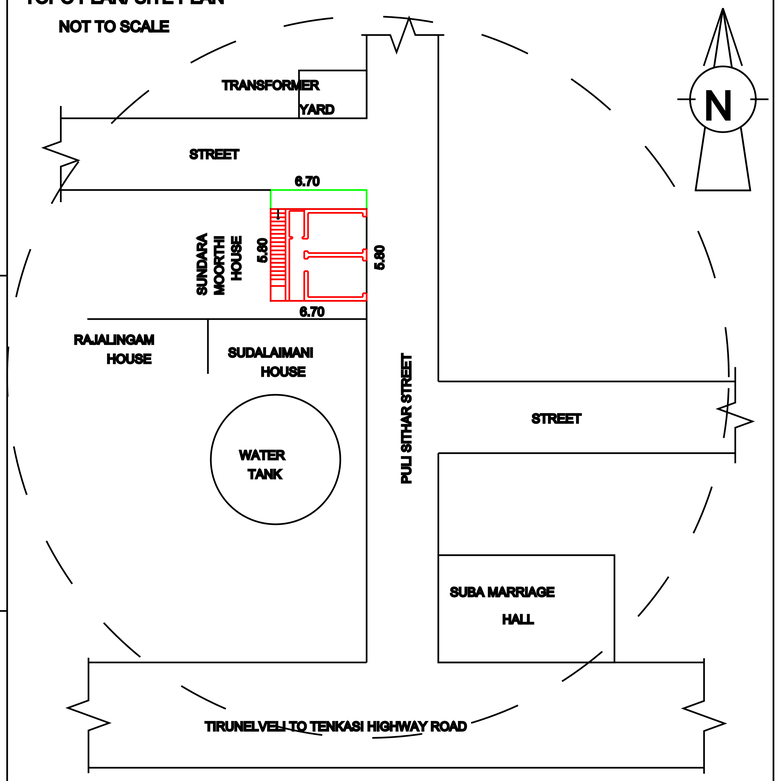

REFERENCE :

D-DOOR	0.90 X 2.10
D1-DOOR	0.75 X 2.10
W-WINDOW	1.20 X 1.20
W1-WINDOW	0.60 X 0.60

COLOUR INDEX

SITE BOUNDARY	
PROPOSED	
ROAD & STREET	
EXISTING	

Mr.S.JANET,
W/O.Mr.SUBRAMANIAN
2/305 PILLAIYAR KOVIL STREET
CHETTIYOOR
KALLURANI-627806
TENKASI DT.
CELL: 9788231791

OWNER'S SIGNATURE

E.R. EDWIN JEYARAJ DCE
REGISTERED ENGINEER-GRADE - III
TENKASI DISTRICT- REG. NO: 26/2022
JEYAM BUILDERS
ANNA NAGAR, ALANGULAM-627851
CELL:9943977366, 04633-272366

ENGINEER

ALL DIMENSION ARE IN METRE SCALE 1:100
ALL THE MAIN WALL ARE IN 230 MM THICK

AREA STATEMENT	SQ.M	SQ.FT
TOTAL SITE AREA	38.83	417.96
AS PER DACUMENT-	0.96 CENTS	
PROPOSED:G.F		
PLINTH AREA	29.94	322.27
CARPET AREA	18.95	203.97
PROPOSED:F.F		
PLINTH AREA	29.94	322.27
CARPET AREA	18.95	203.97

8°55'33.9"N 77°22'19.2"E
8.926092, 77.371999

jeyambuildersalm
jeyambuildersalm@gmail.com
99439-77366
99431-77366
JEYAM BUILDERS

THE LANDLENS SUITE

Eight ways to know a piece of land before you pay for it.

This report covers one part of the picture. These cover the rest, drawn from the same government records, for any property in Tamil Nadu.

LandLens One
Ask anything about a property and get an answer grounded in live government records, with the sources shown.
/landlens/one

Verify My Land
Every record check run on one property and returned as a single report.
/landlens/verify-my-land

Legal Opinion
An advocate's written opinion on the title, built on the records we pull for it.
/landlens

One Map
Every layer on one map: the parcel, its boundary, zoning, water bodies and what sits around it.
/landlens/one/map

PriceMap
What land actually changed hands for around this plot, taken from the registered deeds.
/landlens/pricemap

Build Scope
What you are allowed to build here: floor space, height, coverage and setbacks.
/landlens/build-scope

Property Tracker
Watch a property and hear about it when something new is registered against it.
/landlens/property-tracker

Deal Room
Run the transaction in one place: documents, stamping, signatures and the parties.
/landlens/deal-room

hello@verified.realestate · +91 9996 12 9996

FREE TOOLS · NO ACCOUNT NEEDED

Twenty-four checks you can run yourself, at no cost.

Records and verification

The registers themselves, read for you.

- Encumbrance Certificate
- Patta and Chitta
- Field Measurement Sketch
- EC Analyzer
- Bank charge check
- Court case search
- Seller background check
- Approval check by survey

Value and duty

What it is worth and what it costs to register.

- Guideline value by street
- Guideline value by survey
- Stamp duty and registration fees
- Capital gains
- Floor space index
- Area unit converter

Zoning and land use

What the plan says can happen on this land.

- Land use zone finder
- CMDA land use check
- Coastal regulation zone
- Master plan check
- Water bodies finder
- Airport height clearance

Registers and directories

Who holds it, and which office keeps the record.

- Find your registering office
- Temple property check
- Waqf property check
- RERA register

Every free tool
/tools

Services we run for you
/services

The LandLens suite
/landlens/one

Verified RealEstate™

Every claim in this document traces back to a government record.

- Legal opinions, due diligence and title verification
- Building plan, layout and sub-division approvals
- Completion and occupancy certificates, regularisation
- Escrow, negotiation and NRI property management
- Land survey, soil testing, architecture and construction

Verified RealEstate
3/350/2 Mettukuppam,
OMR Thoraipakkam,
Chennai 600 097, India
hello@verified.realestate
+91 9996 12 9996

Prepared from the registers named on the page each finding sits on. Where a register could not be read, this document says so in its place rather than leaving the gap to be read as a clean result.