Verified RealEstate™

REFERENCE
09/2026-2027

ISSUED
01 October 2026

PP APPROVAL RECORD

# Planning Permission

## Survey 114/2 and 1 more

Periyapillaivalasai

Tenkasi district, Tamil Nadu

APPROVAL TYPE
**Building Plan**

ISSUING AUTHORITY
**Rural Panchayat**

The approval as the planning authority issued it, reproduced in full behind this page.

An approval speaks to what was sanctioned, not to what was built. Completion is a separate record.

Verified RealEstate™
3/350/2 Mettukuppam,
OMR Thoraipakkam,
Chennai 600 097, India

hello@verified.realestate
+91 9996 12 9996
verified.realestate

DIGITALLY VERIFIED RECORD

# PLAN SHOWING THE PROPOSED CONSTRUCTION OF A COMMERCIAL BUILDING AT SURVEY NO: 114/2(PART),

# PERIYAPILLAIVALASAI VILLAGE PANCHAYAT, SHENGOTTAI TALUK, TENKASI DISTRICT, TAMILNADU.

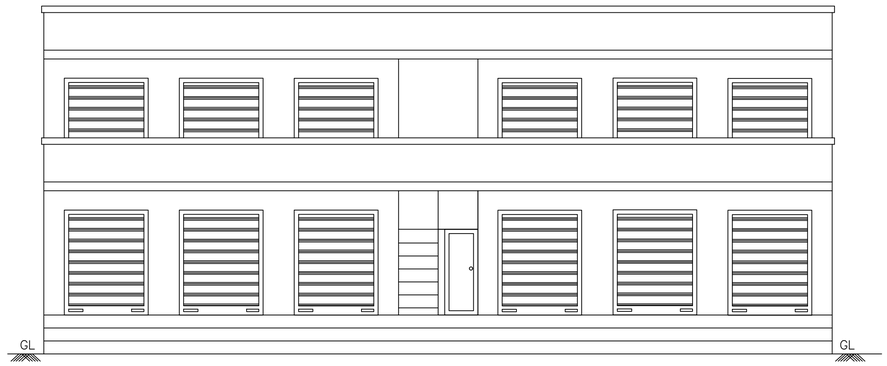


ELEVATION

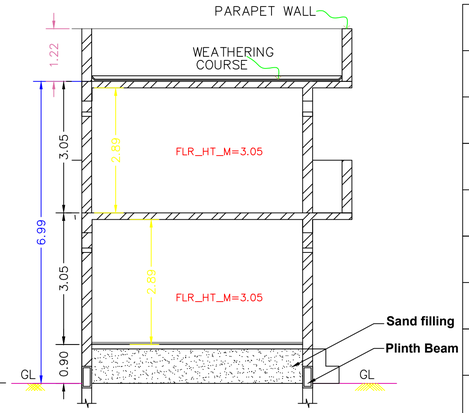


SECTION ON - AB

| SHOP AREA DETAILS | |
|---|---|
| SHOP 1 | 157.38 sq.ft |
| SHOP 2 | 157.38 sq.ft |
| SHOP 3 | 157.38 sq.ft |
| SHOP 4 | 157.38 sq.ft |
| SHOP 5 | 157.38 sq.ft |
| SHOP 6 | 157.38 sq.ft |
| SHOP 7 | 157.38 sq.ft |
| SHOP 8 | 157.38 sq.ft |
| SHOP 9 | 157.38 sq.ft |
| SHOP 10 | 157.38 sq.ft |
| SHOP 11 | 157.38 sq.ft |
| SHOP 12 | 157.38 sq.ft |

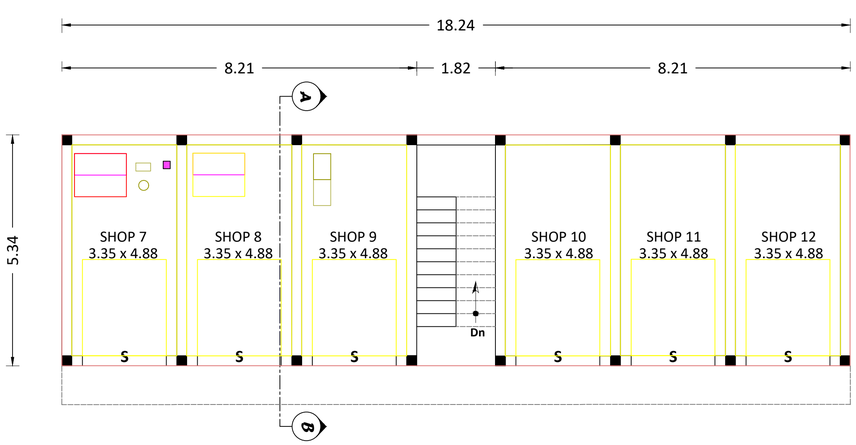


FIRST FLOOR PLAN

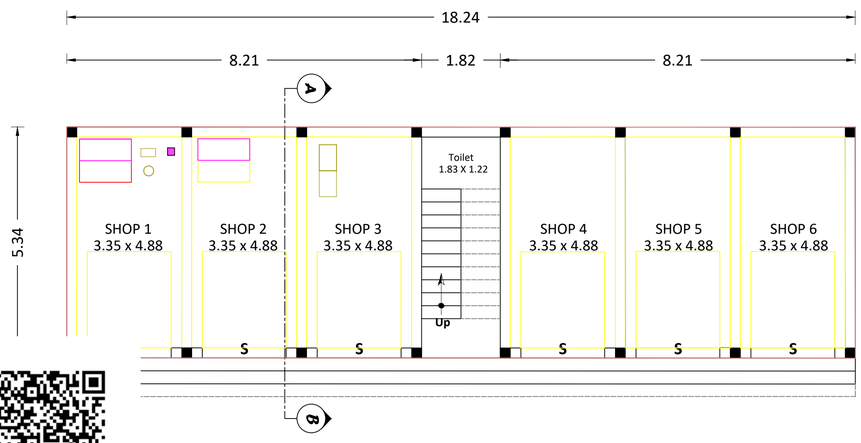


GROUND FLOOR PLAN

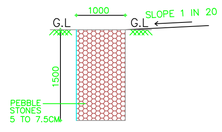


SECTION OF PEBBLE TRENCH

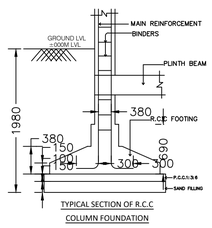


TYPICAL SECTION OF R.C.C COLUMN FOUNDATION

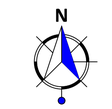


SITE PLAN
SCALE 1:100

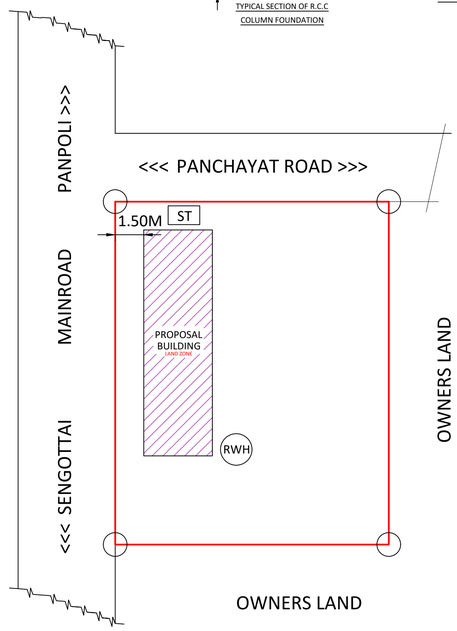


**KEY PLAN**
NOT TO SCALE




1. That rain water harvesting and waste water recycling system shell be provided as per building rules.
2. Solar water heating system provided at the topmost level of the building.
3. Map is oriented to magnetic north
4. All dimensions are in meter.
5. Scale - 1 : 100

| JOINERY DETAILS | | |
|---|---|---|
| S | SHUTTER | 2.00 X 2.10 |
| D | DOOR | 0.90 X 2.10 |
| D1 | DOOR | 0.75 X 2.10 |
| W | WINDOW | 1.82 X 1.20 |
| V | VENTILATOR | 0.60 X 0.60 |

DWNG NO - PA/26/SEP/106

## AREA STATMENT

| | SQ 'M' | SQ 'FT' |
|---|---|---|
| AREA OF THE SITE (AS ON SITE) | 971.23 | 10454.40 |
| AREA OF THE SITE (AS ON DOCUMENT) | 971.23 | 10454.40 |
| AREA OF THE SITE (SUPER IMPOSED) | 971.23 | 10454.40 |
| PLINTH AREA OF THE PRO BUILDING "GF" | 87.72 | 944.30 |
| PLINTH AREA OF THE PRO BUILDING "FF" | 87.72 | 944.30 |

**APPLICANT**

P.R.SARAVANAN - 1

P.R.BALAKRISHNAN -2

P.R.MUTHUKUMAR-3

**ENGINEER**

**Er. M.NAGARASAN** DCE., BE
REGISTERED PROFESSIONAL / ENGINEER
TENKASI PANCHAYAT UNION
ந.க.எண்:BDO BLK/86/2023/A2, DT: 06.06.2023
**NILAI CONSTRUCTION & DESIGN**
S.No.9, Madurai ROAD,
TENKASI-627 811 Ph. 8870611302.

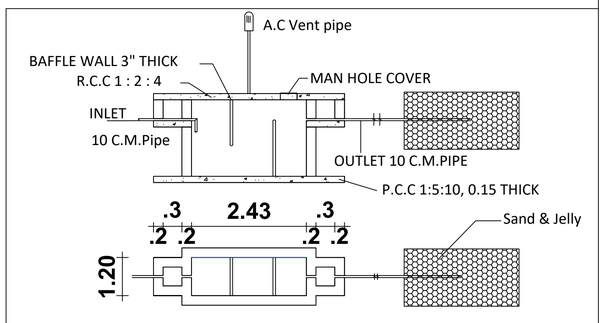


SEPTIC TANK AND TRENCH

THE LANDLENS SUITE

# Eight ways to know a piece of land before you pay for it.

This report covers one part of the picture. These cover the rest, drawn from the same government records, for any property in Tamil Nadu.

### LandLens One
Ask anything about a property and get an answer grounded in live government records, with the sources shown.
**/landlens/one**

### Verify My Land
Every record check run on one property and returned as a single report.
**/landlens/verify-my-land**

### Legal Opinion
An advocate's written opinion on the title, built on the records we pull for it.
**/landlens**

### One Map
Every layer on one map: the parcel, its boundary, zoning, water bodies and what sits around it.
**/landlens/one/map**

### PriceMap
What land actually changed hands for around this plot, taken from the registered deeds.
**/landlens/pricemap**

### Build Scope
What you are allowed to build here: floor space, height, coverage and setbacks.
**/landlens/build-scope**

### Property Tracker
Watch a property and hear about it when something new is registered against it.
**/landlens/property-tracker**

### Deal Room
Run the transaction in one place: documents, stamping, signatures and the parties.
**/landlens/deal-room**

FREE TOOLS · NO ACCOUNT NEEDED

# Twenty-four checks you can run yourself, at no cost.

## Records and verification

The registers themselves, read for you.

- Encumbrance Certificate
- Patta and Chitta
- Field Measurement Sketch
- EC Analyzer
- Bank charge check
- Court case search
- Seller background check
- Approval check by survey

## Value and duty

What it is worth and what it costs to register.

- Guideline value by street
- Guideline value by survey
- Stamp duty and registration fees
- Capital gains
- Floor space index
- Area unit converter

## Zoning and land use

What the plan says can happen on this land.

- Land use zone finder
- CMDA land use check
- Coastal regulation zone
- Master plan check
- Water bodies finder
- Airport height clearance

## Registers and directories

Who holds it, and which office keeps the record.

- Find your registering office
- Temple property check
- Waqf property check
- RERA register

**Every free tool**
/tools

**Services we run for you**
/services

**The LandLens suite**
/landlens/one

Verified RealEstate™

# Every claim in this document traces back to a government record.

- Legal opinions, due diligence and title verification
- Building plan, layout and sub-division approvals
- Completion and occupancy certificates, regularisation
- Escrow, negotiation and NRI property management
- Land survey, soil testing, architecture and construction

**Verified RealEstate**
3/350/2 Mettukuppam,
OMR Thoraipakkam,
Chennai 600 097, India
**hello@verified.realestate**
+91 9996 12 9996

Prepared from the registers named on the page each finding sits on. Where a register could not be read, this document says so in its place rather than leaving the gap to be read as a clean result.