PLAN SHOWING THE PROPOSED CONSTRUCTION OF MANUFACTURERS OF SODIUM SILICATE GLASS & LIQUID UNIT FOR JERRY ALKALINE CHEM INDUSTRIES IN R.S.NO:41/4, AT ONGC MAIN ROAD, NEIKUNNAM VILLAGE, DEEPAMBALPURAM PANCHAYAT, AMMAPETTAI UNION, PAPANASAM TALUK, THANJAVUR DISTRICT. **[SCALE:- 1:100] NAME OF THE OWNER :- J.THOMAS JEYASINGH**

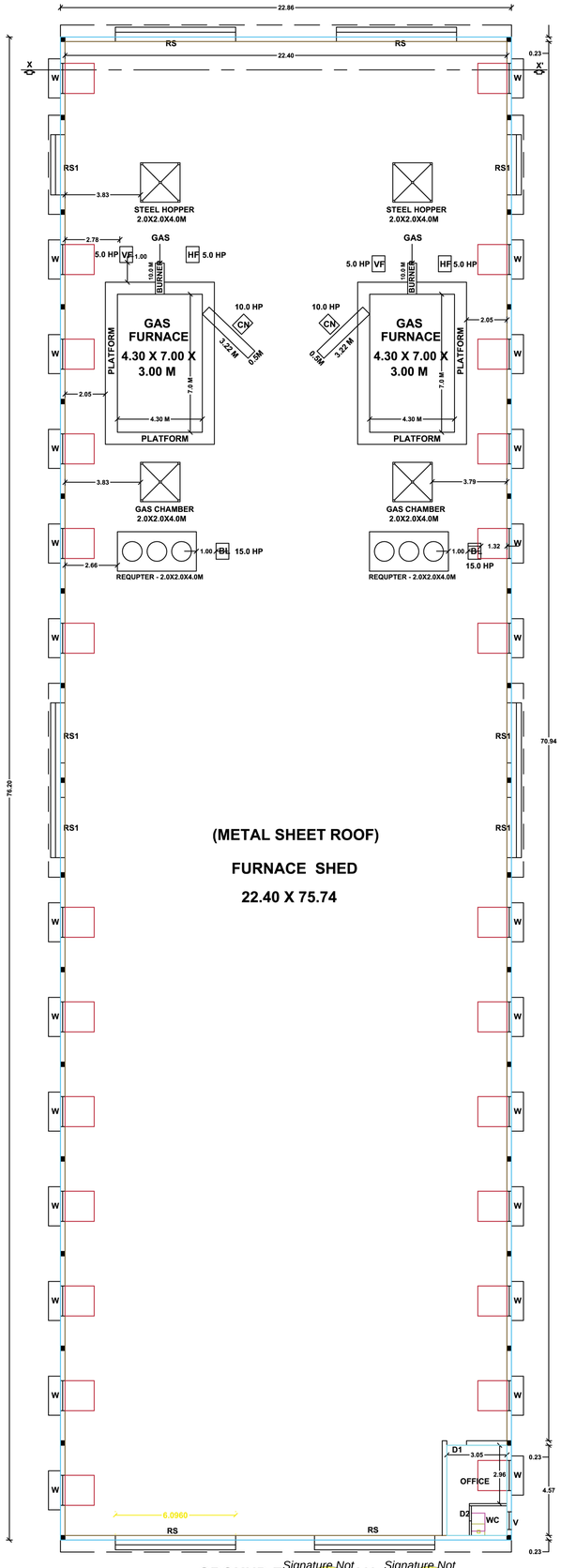

GROUND FLOOR PLAN
(FURNACE SHED)

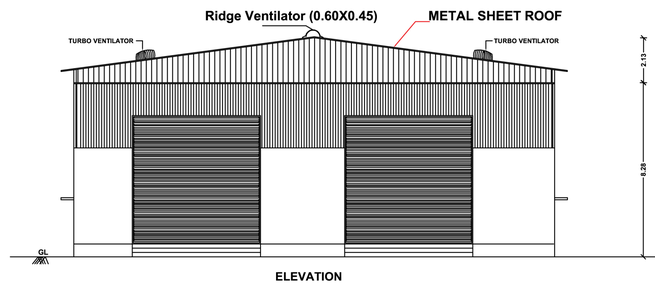

ELEVATION

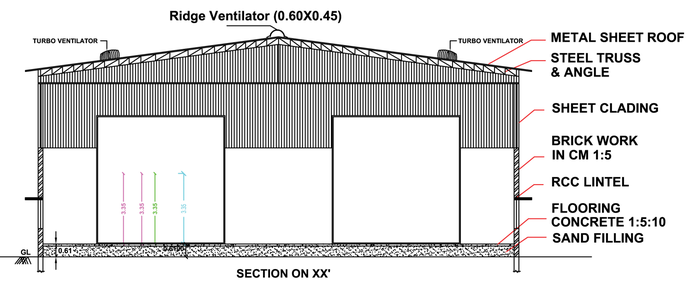

SECTION ON XX'

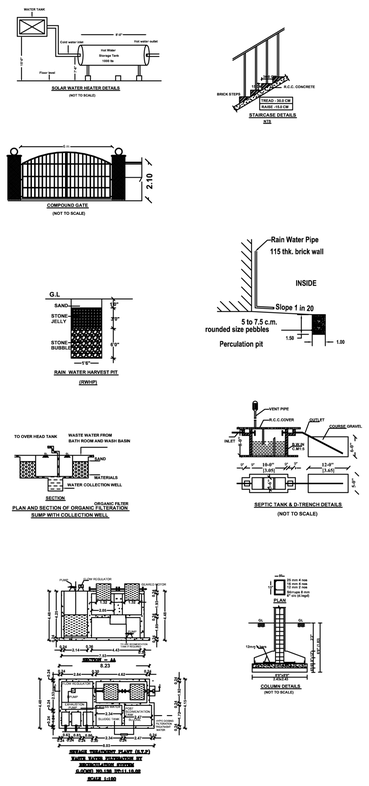

மாவட்ட நகர் ஊரமைப்பு அலுவலகம்
தஞ்சாவூர் மாவட்டம்
ந.க.எண் . **SWP/BPA/023285/2023**
உத்தரவில் கண்டுள்ளவாறு மனையிடத்திற்கு
'A' TO 'I' என எல்லையிட்டு அம்மனையிடத்தில்
அமையும் கட்டிட வரைபடத்திற்கு
SWP/DTCP/TNJ/R/BP NO :- 02/2024
என எண்ணிடப்பட்டு செயலாணை கடிதம்
ந.க.எண் . **SWP/BPA/023285/2023**
தெரிவித்துள்ள நிபந்தனைகளுடன் மனையிட
ஒப்புதல் மற்றும் கட்டிட வரைபடத்திற்கு
தொழில்நுட்ப ஒப்புதல் வழங்கப்படுகிறது.

Note : The OSR Site has been Marked as (a to e) (523.84 sqm - 10.27%) must be maintained & owned by applicant as said in Rule No : 41 Exp (i) TNCBR - 2019

SWP / DTCP / TNJ / R / BPA NO : 02/2024

Surveyor- Malarkodi
D3-Senthamilselvi
PA- Arangarasu

ASST. DIRECTOR
TOWN & COUNTRY PLANNING
THANJAVUR DISTRICT

REGISTERED ENGINEER

Er. R. PONRAJESWARAN, B.E.,
Registered Engineer Grade-III, (RE),
Reg. No: 006 - RE - GR III/2020,
10, Kulanthaiammal Nagar Second Cross,
THANJAVUR - 613 007, Cell:96 26 44 33 72.

CONSTRUCTION ENGINEER

Er. R. PONRAJESWARAN, B.E.,
Registered Engineer Grade-III, (RE),
Reg. No: 006 - RE - GR III/2020,
10, Kulanthaiammal Nagar Second Cross,
THANJAVUR - 613 007, Cell:96 26 44 33 72.

STRUCTURAL ENGINEER

Er. D. AMAL COLINS, M.Tech.,
M.I.S.T.E., M.I.E., C.E., F.I.V., M.I.I.T / Arb., I.S.E.,
Consulting Engineer & Licensed Surveyor
Panel of Engineer & Panel Valuer for Banks, TNC,
Registered Structural Engineer-GRI,
in LSA, Registration No:004-RSE,
Registred Engineer in Municipal Corporation;
Registration No: 107 / LS /2016 / 00019,
Plot No:218, Philomina Nagar 4th Cross,
N.K. Road, THANJAVUR-613 006.
Cell: 9976747111, 9629658140.

SCHEDULE OF JOINERIES

RS - ROLLING SHUTTER	- 6.10 X 6.10M	
RS1 - ROLLING SHUTTER	- 3.05 X 6.10M	
D1 - DOOR	- 1.22 X 2.13M	
D2 - DOOR	- 0.76 X 2.13M	
W - WINDOW	- 1.37 X 1.37M	
V - VENTILATOR	- 0.90 X 0.61M	
AREA DETAILS	**SQ.MT.**	
AREA OF SITE	5100.00	
	FSI	NON - FSI
GROUND FLOOR AREA	1726.18	
OFFICE ROOM AREA	15.75	
	1741.93	

FLOOR SPACE INDEX (FSI) = 1741.93 / 5100.00 = 0.34

PLOT COVERAGE (PC) = 1741.93 / 5100.00 X 100 = 34.15 %

PARKING

NUMBER OF LORRY PARKING (3.75 X 10.00) = 4 nos.
NUMBER OF TWO WHEELER PARKING (1.50 X 2.00) = 34 nos.
NUMBER OF CYCLE PARKING (1.50 X 2.00) = 34 nos.
NUMBER OF CAR PARKING (2.50 X 5.00) = 2 nos.

COLOUR INDEX

- PROPOSED SITE
- PROPOSED BUILDING
- PROPOSED DRIVE WAY
- EXISTING ROAD
- EXISTING BUILDING TO BE DEMOLISHED
- RAIN WATER HARVEST BED
- OSR

APPLICANT

For JERRY ALKALINE CHEM INDUSTRIES
(J. Thomas Jeyasingh)
Proprietor

TOTAL NO OF LABOUR - 20 NOS			TOTAL POWER	- 71.50 HP	
S.NO	INDEX	MACHINE DETAIL	QTY (NOS)	HP	POWER (HP)
1.	HF	HORIZONTAL FEEDER - 5.0 HP	2	5	10.00
2.	VF	VERTICAL FEEDER - 5.0 HP	2	5	10.00
3.	BL	BLOWER - 15.0 HP	2	15	30.00
4.	CN	CONVEYOR - 10.0 HP	2	10	20.00
5.	BW	BORE WATER - 1.50 HP	1	1.50	1.50
6.	GS	GENSET - 200 Kva (Stand by)	1		-
		TOTAL POWER (H.P)			71.50

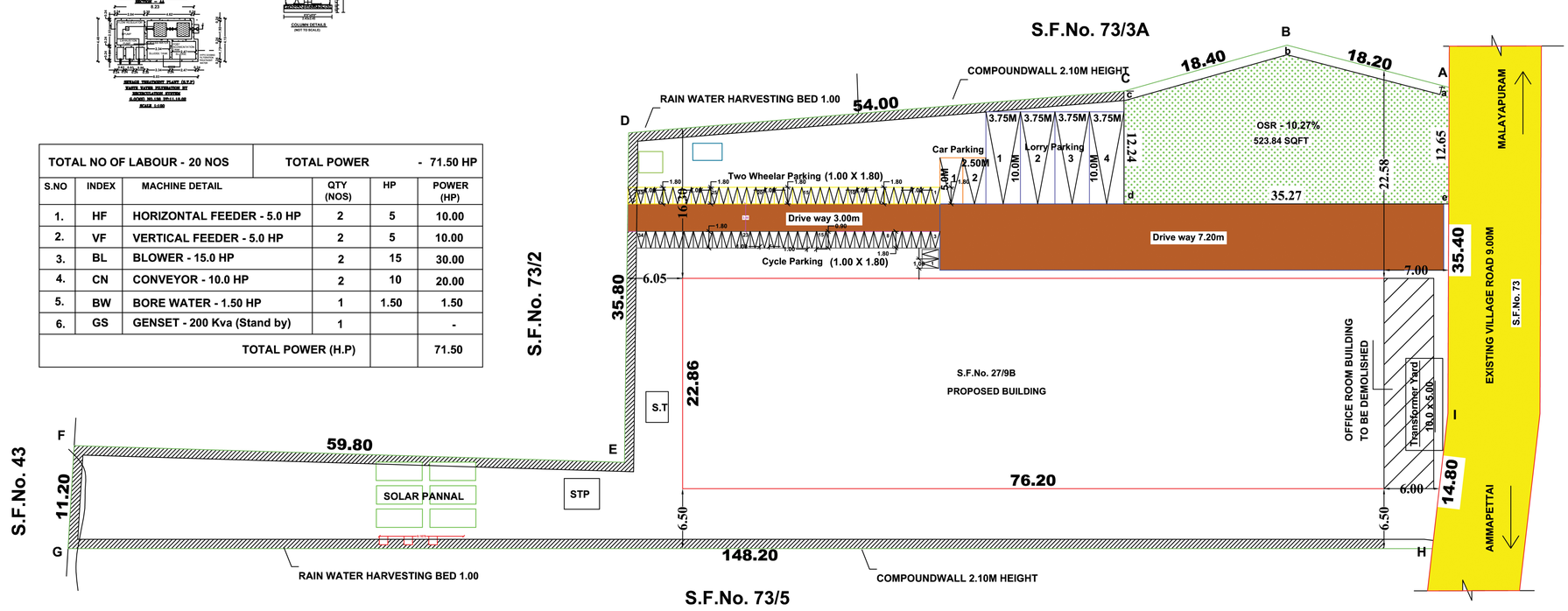

Signature Not Verified
Signed by Assistant Director
Date: 2025.03.19 09:09:52

Signature Not Verified
Signed by Village Panchayat President
Location: Thanjavur
Date: 2025.03.24 12:09:16