PP APPROVAL RECORD

Planning Permission

Survey 121B

Moorthiambalpuram

Thanjavur district, Tamil Nadu

APPROVAL TYPE
Building Plan

ISSUING AUTHORITY
Rural Panchayat

The approval as the planning authority issued it, reproduced in full behind this page.

An approval speaks to what was sanctioned, not to what was built. Completion is a separate record.

Verified RealEstate™

3/350/2 Mettukuppam,
OMR Thoraipakkam,
Chennai 600 097, India

hello@verified.realestate

+91 9996 12 9996

verified.realestate

Plan Showing The Proposed Construction of RCC Roof Ground Floor Residential Building at Patta No - 1968 , Rev.Sy No - 121B / 6B1A in Sunnambukarai Street at Panayakottai Habitation , Panayakottai Rev.Village in Moorthiambalpuram Village Panchayat at Orathanadu Panchayat Union , Orathanadu Taluka , Thanjavur District - 614 019.

All Dimension are in Metres
(Scale 1:100)

Name of Applicant :- Mrs B Alamelu , W/O Mr. M.Balu ,
Mobile No : 82482 87282
Adhar No : 3419 3059 4318
PAN No : DLZPA0808P
Reg.Sale Deed Document No : 2306/2010 ; Date :- 29.12.2010
Patta No : 1968 , Rev.Sy.No : 121B / 6B1A - 4.05 Ares - 405.00 Sq.m
As Per Schedule :- Site Area - 405.00 Sq.m - 4356.00 Sq.ft

Site Location :-

Latitude :- 10.720117 - 10.43.12.4"N
Longitude :- 79.275540 - 79.16.31.9"E

Plot Area Details	Sq.Mt	Sq.Ft
Site as per Document	405.00	4356.00
Site as per FMP/PLR	405.00	4356.00
Site as per Super Imposed	405.00	4356.00
Build Up Area Details	**Sq.Mt**	**Sq.Ft**
Pro.G.Floor Residential Area	66.19	712.40
Exi.G.Floor Residential Area	42.32	455.53
Vaccant Land Area as per Site	296.49	3188.07

Schedule of Joinery		
MD	Main Door	1.00 X 2.13
A/O	Arch Open	0.91 X 2.13
D1	Door	0.91 X 2.13
D2	Door	0.76 X 2.13
W	Window	1.52 X 1.22
J	Jolly	1.52 X 1.22
V	Ventilator	0.76 X 0.76

Colour Index
Proposal Site Boundary
Road Boundary
Site Boundary

FSI Area Details
FSI Area in Sq.m = 66.19 / 405.00 = 0.16 Sq.m
FSI Area in % = 16.34 %

Applicant Signature :

Mrs B Alamelu , W/O Mr. M.Balu

Registered Engineer :

S. Gowthaman

Er. S.Gowthaman.., B.E Civil ..,
Licensed Register Engineer Grade II - RE
Licensed Reg No : 107/LS/2023/00035
Office :- Near BSNL Exchange ,
Railway Station Road , Ammapettai -614401 ,
Venue : 185 , South Street ,
Karuppa Mudhaliyar Kottai - 614403 ,
E-mail :- gowthamaellai1996@gmail.com
Mobile : 9894804408 .

Drawn By : Er S.Gowthaman B.E(Civil)
Venue :- SK Construction & Architecture
Mobile : 9894804408

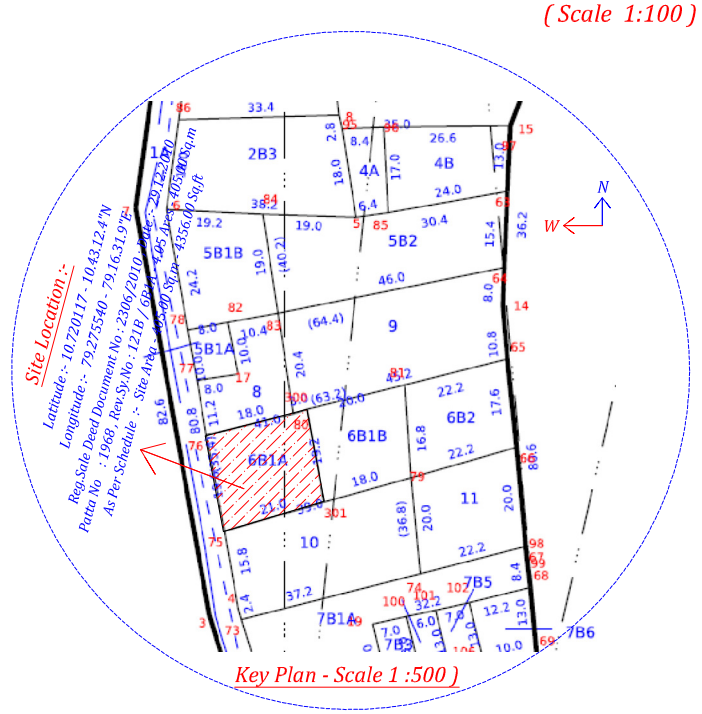

Key Plan - Scale 1 :500)

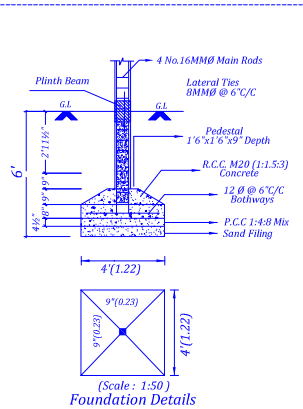

(Scale : 1:50)
Foundation Details

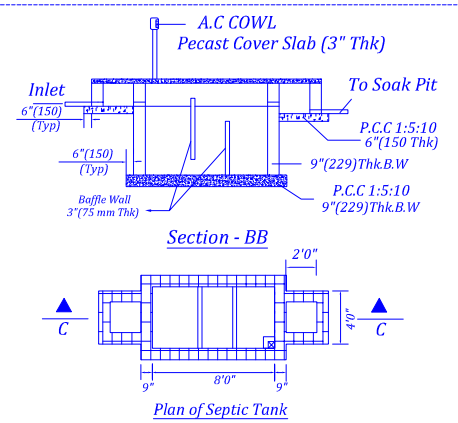

Plan of Septic Tank

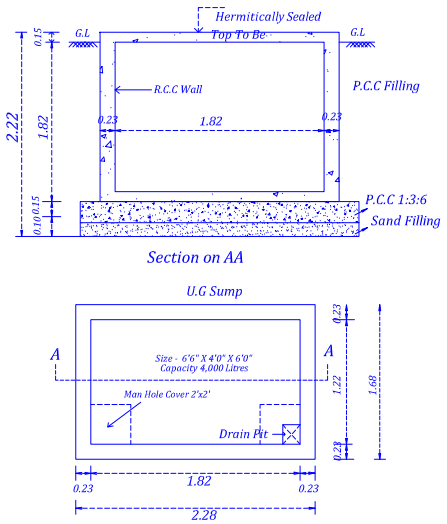

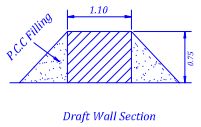

Draft Wall Section
(Not To Scale)

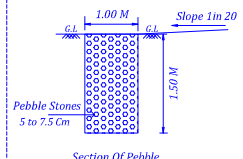

Section Of Pebble Trench (Scale - 1:100)

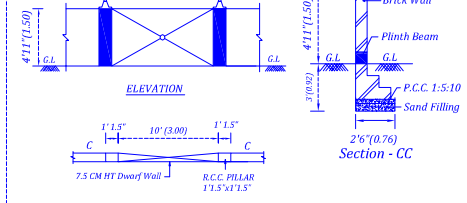

Compound Wall - Plan

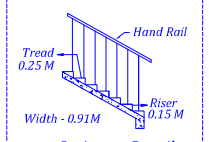

Staircase Details

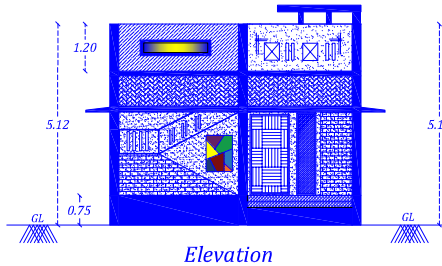

Elevation
(View is in Mirror of G.F Plan)

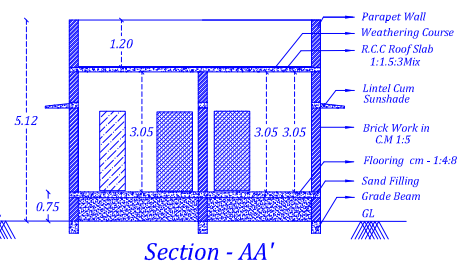

Section - AA'
(View is in Mirror of G.F Plan)

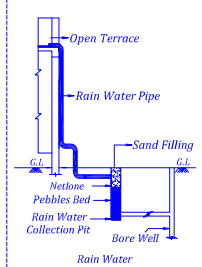

Rain Water Harvesting System

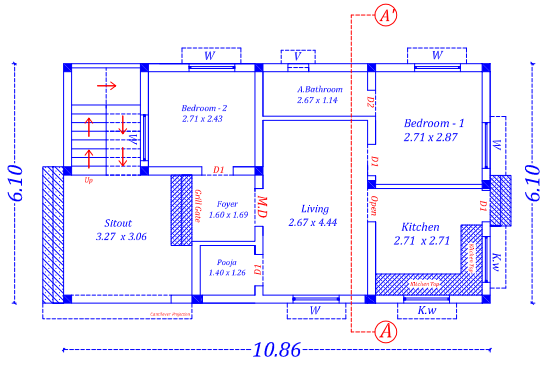

Proposal Ground Floor Residential Plan
(Site Plan View is in West Facing)

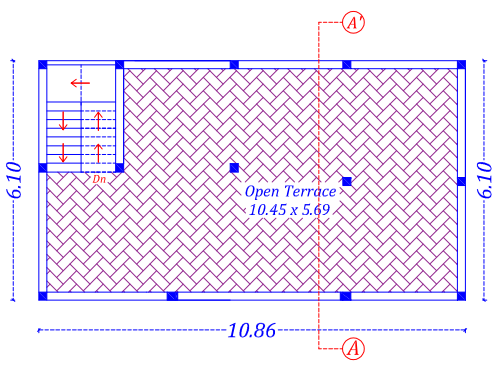

Proposal G.Floor - Terrace Plan - (Roof Top)
(Site Plan View is in West Facing)

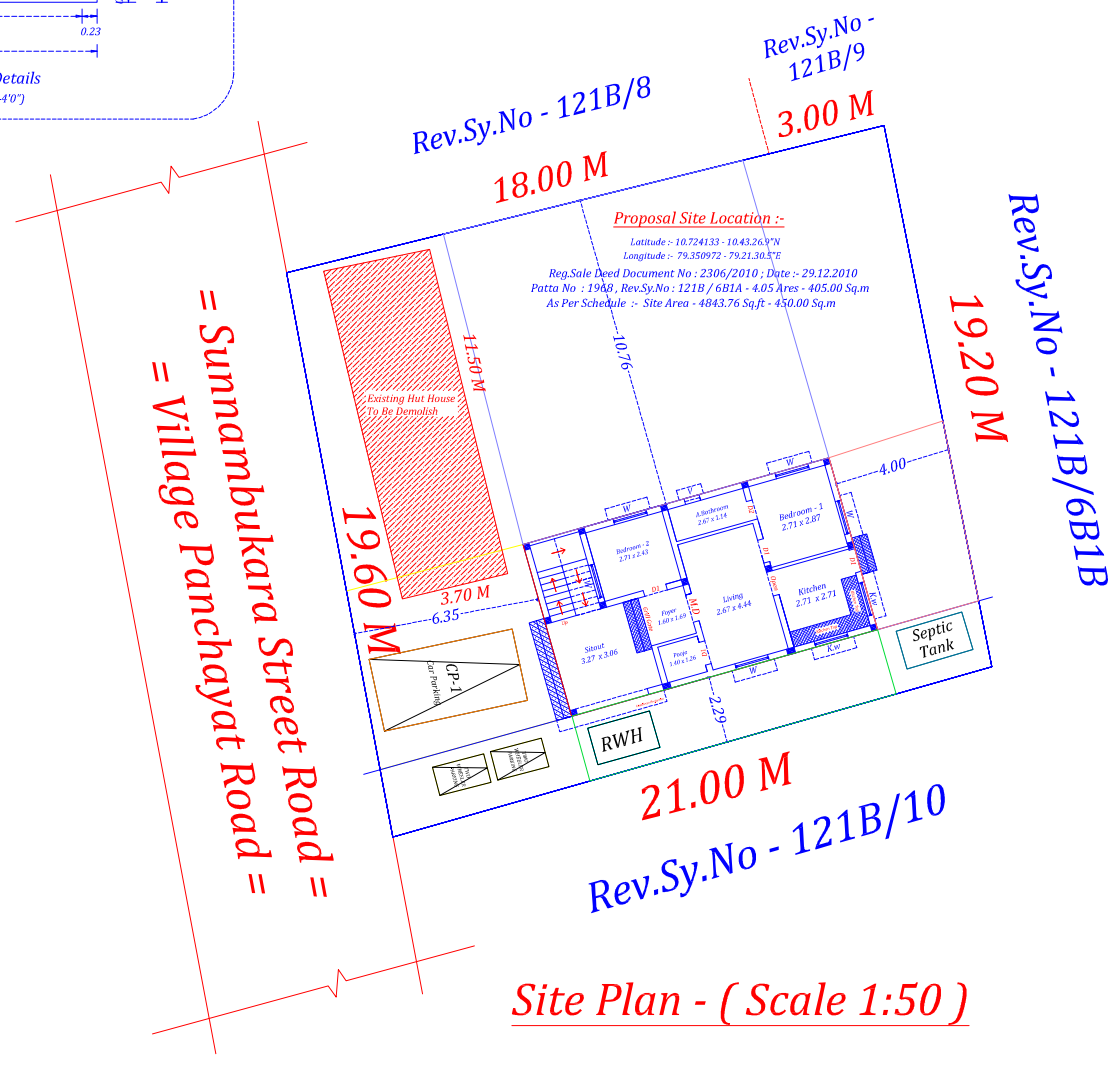

Site Plan - (Scale 1:50)

Office Use :

PLAN INFO
PLOT_AREA_M2=405.00
AS_AT_SITE=405.00
FMB_OR_PLR=405.00
AS_PER_DOCUMENT=405.00
BUILDING_NEAR_GOVT_BLDG=NO
PROVISION_FOR_GREEN_BUILDINGS_AND_SUSTAINABILITY=YES
FIRE_PROTECTION_AND_FIRE_SAFETY_REQUIREMENTS=YES
IF_HERITAGE_TOWN_LESSTHAN_1KM_RADIUS=NO
JURISDICTION_TYPE= PANCHAYAT

THE LANDLENS SUITE

Eight ways to know a piece of land before you pay for it.

This report covers one part of the picture. These cover the rest, drawn from the same government records, for any property in Tamil Nadu.

LandLens One
Ask anything about a property and get an answer grounded in live government records, with the sources shown.
/landlens/one

Verify My Land
Every record check run on one property and returned as a single report.
/landlens/verify-my-land

Legal Opinion
An advocate's written opinion on the title, built on the records we pull for it.
/landlens

One Map
Every layer on one map: the parcel, its boundary, zoning, water bodies and what sits around it.
/landlens/one/map

PriceMap
What land actually changed hands for around this plot, taken from the registered deeds.
/landlens/pricemap

Build Scope
What you are allowed to build here: floor space, height, coverage and setbacks.
/landlens/build-scope

Property Tracker
Watch a property and hear about it when something new is registered against it.
/landlens/property-tracker

Deal Room
Run the transaction in one place: documents, stamping, signatures and the parties.
/landlens/deal-room

FREE TOOLS · NO ACCOUNT NEEDED

Twenty-four checks you can run yourself, at no cost.

Records and verification

The registers themselves, read for you.

- Encumbrance Certificate
- Patta and Chitta
- Field Measurement Sketch
- EC Analyzer
- Bank charge check
- Court case search
- Seller background check
- Approval check by survey

Value and duty

What it is worth and what it costs to register.

- Guideline value by street
- Guideline value by survey
- Stamp duty and registration fees
- Capital gains
- Floor space index
- Area unit converter

Zoning and land use

What the plan says can happen on this land.

- Land use zone finder
- CMDA land use check
- Coastal regulation zone
- Master plan check
- Water bodies finder
- Airport height clearance

Registers and directories

Who holds it, and which office keeps the record.

- Find your registering office
- Temple property check
- Waqf property check
- RERA register

Every free tool
/tools

Services we run for you
/services

The LandLens suite
/landlens/one

Verified RealEstate™

Every claim in this document traces back to a government record.

- Legal opinions, due diligence and title verification
- Building plan, layout and sub-division approvals
- Completion and occupancy certificates, regularisation
- Escrow, negotiation and NRI property management
- Land survey, soil testing, architecture and construction

Verified RealEstate
3/350/2 Mettukuppam,
OMR Thoraipakkam,
Chennai 600 097, India
hello@verified.realestate
+91 9996 12 9996

Prepared from the registers named on the page each finding sits on. Where a register could not be read, this document says so in its place rather than leaving the gap to be read as a clean result.