PP APPROVAL RECORD

Planning Permission

Theni

Theni district, Tamil Nadu

APPROVAL TYPE
Building Plan

ISSUING AUTHORITY
Town Panchayat

The approval as the planning authority issued it, reproduced in full behind this page.

An approval speaks to what was sanctioned, not to what was built. Completion is a separate record.

PLAN SHOWING THE PROPOSED CONSTRUCTION OF A INDUSTRIAL BUILDING FOR M/s RMG POLYVINYL INDIA LIMITED S.FNOs:19/10, 122/4pt, 122/5pt, 122/7pt, 122/8A, 122/9, 122/10, 122/11, 130/4Cpt, 130/4Dpt, 137/1pt, 137/2pt,138pt, 139/2pt, 140/1pt, 140/1Bpt, 140/2A1pt, 140/2A2, 140/2B1pt, 140/2B2, 140/3Apt, 140/4, 140/5, 140/6A, 140/6B, 140/7pt, 140/8,140/9A, 140/9B, AND 411/5pt IN Approved Layout of Cheyyar "SIPCOT INDUSTRIAL PARK PHASE – II" IN PLOT NO :B6/2, OF Sozhavaram VILLAGE, Vembakkam Taluk THIRUVANNAMALAI DISTRICT .

NOTES:–
ALL DIMENSIONS ARE IN METRES

SCALE:– 1:1000

PLOT AREA : 8163.156 Sq.mt

AREA DETAILS

Description	Non- FSI Area in sq.mt	FSI Area in sq.mt	Total Area in sq.mt
Factory Building	—	3494.40	3494.40
Mezzanine-I	—	537.60	537.60
Meter Room	—	60.00	60.00
Driver Rest Room	—	91.20	91.20
Work Shop	—	60.00	60.00
Toilet	—	47.20	47.20
Chiller Plant	—	87.50	87.50
Total Floor Area	—	4377.90	4377.90
Technicians & Workers Room Cum Security Block	—	24.00	24.00
Total Area	—	4401.90	4401.90
Plot Coverage	3864.30 / 80937.10 X 100 = 4.80%		
Total F.S.I	4401.90 / 80937.10 = 0.054		

PARKING DETAILS

	REQUIRED	PROVIDED
Truck Parking	13 Nos	13 Nos
Two Wheeler Parking	78 Nos	78 Nos
Car Parking	03 Nos	03 Nos

No of Workers : 100 Nos
Total H.P : 2714.00 HP

SCHEDULE OF JOINERY:–

TYPE	DESCRIPTION	SIZE IN METRE
RS	ROLLING SHUTTER	4.00 x 4.00
RS1	ROLLING SHUTTER	3.00 x 4.00
RS2	ROLLING SHUTTER	3.00 x 3.00
ED	EMERGENCY DOOR(FIRE DOOR)	1.00 x 2.10
W	WINDOW	2.10 x 1.20

SCHEDULE OF JOINERY (WORK SHOP & DRIVERS REST ROOM)

S:NO		DESCRIPTION	SIZE IN 'MM'
1	D1	DOOR (ALUMINUM)	900 x 2100
2	D2	DOOR (WPC)	750 x 2100
3	DD	DOUBLE DOOR	1500 x 2100
4	RS	ROLLING SHUTTER	3000 x 3000
5	W1	WINDOW	1200 x 1200
6	V	VENTILATOR	600 x 600

SCHEDULE OF JOINERY (BOILER SHED)

S:NO		DESCRIPTION	SIZE IN 'MM'
1	RS	ROLLING SHUTTER	5000 x 4500
2	W	WINDOW	1500 x 1200
3	–	LOUVER VENTILATOR	3000 x 1000

SCHEDULE OF JOINERY (METER ROOM)

S:NO		DESCRIPTION	SIZE IN 'MM'
1	RS1	ROLLING SHUTTER 1	3000 x 3000
2	W1	WINDOW 1	1500 x 1200
3	D	DOOR	1000 x 2100

MACHINE MOTOR LIST:–

SI.NO	MOTOR TYPE	QTY	HP USED	TOTAL HP USED
	CALENDER MACHINE			
1	BLENDER MIXER	1 NOS	60HP	60
2	INTENSIVE MIXER	1 NOS	420HP	420
3	INTENSIVE MIXER	1 NOS	420HP	420
4	MIXING MILL	1 NOS	75HP	75
		1 NOS	100HP	100
5	STRAINER EXTRUDER	1 NOS	260HP	260
6	MIXING MILL	2 NOS	75HP	150
7	4–ROLL CALENDER	4 NOS	150HP	600
		8 NOS	5HP	40
8	POST CALENDERING MACHINE	1 NOS	15HP	15
		1 NOS	20HP	20
		2 NOS	1HP	2
		1 NOS	25HP	25
		2 NOS	7.5HP	15
9	TEMPERATURE CONTROL UNITS	7 NOS	3HP	21
10	LAMINATING MACHINE			
		2 NOS	10HP	20
		2 NOS	7.5HP	15
		2 NOS	15HP	30
		1 NOS	5HP	5
11	TEMPERATURE CONTROL UNITS	10 NOS	3HP	30
12	FIRE HYDRANT SYSTEM	1 NOS	7.5HP	7.5
		1 NOS	50HP	50
13	COOLING TOWER 100 TR	2 NOS	7.5HP	15
		1 NOS	20HP	20
14	CHILLER PLANT	1 NOS	15HP	15
		4 NOS	20HP	80
15	COMPRESSOR	1 NOS	40HP	40
16	BLOWN FILM	1 NOS	40HP	40
		1 NOS	30HP	30
17	SCRAP GRINDER MACHINE	1 NOS	40HP	40
18	THERMOPAC(10KL)	1 NOS	15HP	15
		1 NOS	20HP	20
		1 NOS	7.5HP	7.5
19	WORKSHOP	2 NOS	3HP	6
		1 NOS	5HP	5
	TOTAL HP USED		2714.00HP	

SPECIFICATION:–

FOUNDATION
FOUNDATION AND BASEMENT IN RCC PEDESTAL AND PLINTH BEAM OVER A BED OF RCC 1:4:8, 6"THICK AS PER STRUCTURAL DETAILS.

SUPER STRUCTURE
SUPER STRUCTURE IN 200mm THK ,100mm THK. SOLID BLOCK WALLS WITH CEMENT MORTOR 1:5

RCC MEMBERS
FOOTING , COLUMNS, PLINTH BEAMS ,LINTEL, SUNSHADE & FLOOR WITH RCC 1:1.5:3USING 20MM NOMINAL SIZE BROCKEN STONES.

PLASTERING
WALLS INSIDE & OUTSIDE IN CM 1:5,12mm THK.

PAINTING
FINISHING THE WALL PRIMING COAT

FLOORING
FINISHING THE FLOOR WITH 150mm THK, VACCUM DEWATERING FLOORING OVER A BED OF WET MIX MACADAM

DOORS
DOORS WITH COUNTRY WOODEN FRAMES / M.S FRAMES , 32mm THK. FLUSH DOOR SHUTTERS , SS FASTENINGS , PAINT FINISH

N
W E
S

COLOUR INDEX:–
PROPOSED
ROAD
BOUNDARY

ONLINE APPLICATION NO: SWP/BPA/0011966/2023

BP/AD-DTCP(TVM)-NO: 56/2023

RMG POLYVINYL INDIA LIMITED
Authorized Signatory

APPLICANT

P. SUNDHAR, BE.,
REGISTERED ENGINEER GRADE - I
TVLR / RE / GR-I / 2022 / 09 / 003
8A, Gangadeeswarar Koil Street,
Manavalanagar, Thiruvallur - 602 002.

REGISTERED ENGINEER

S. NAVEEN RAJ, ME.,
STRUCTURAL ENGINEER GRADE - I
TVLR / RSE / GR-I / 2022 / 09 / 011
8A, Gangadeeswarar Koil Street,
Manavalanagar, Thiruvallur - 602 002.

STRUCTURAL ENGINEER

K. RAJENDRAN, PD,Arch,I.D
REGISTERED ARCHITECT
CA. 92 /15005
TVLR / RA / Gr-I / 2019 / 09 / 007
8A, Gangadeeswarar Koil Street,
Ondikuppam, Manavalanagar,
Thiruvallur - 602 002.

ARCHITECT

Er. M.Ammaiappan, B.E., M.E., (Geo Tech) (Ph.D)
Registered Geo Technical Engineer
DTCP - Reg. No. TVLR/RGTE/2021/06/002
Thirumullaivoyal, Chennai - 600 062.

GEO TECHNICAL

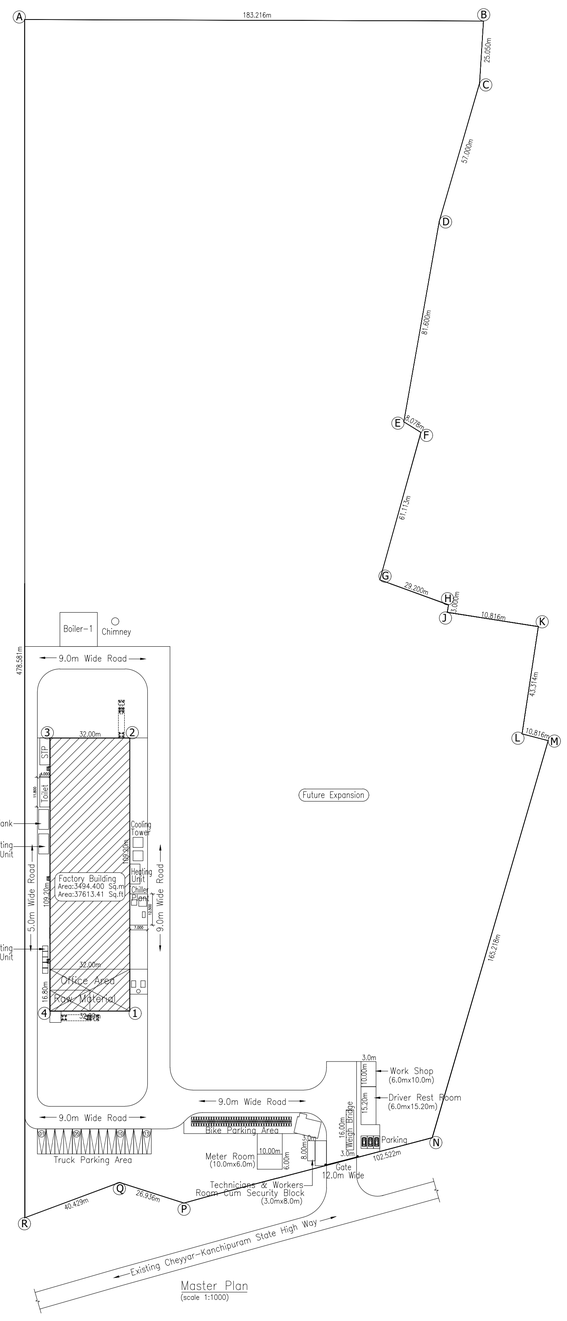

Master Plan
(scale 1:1000)

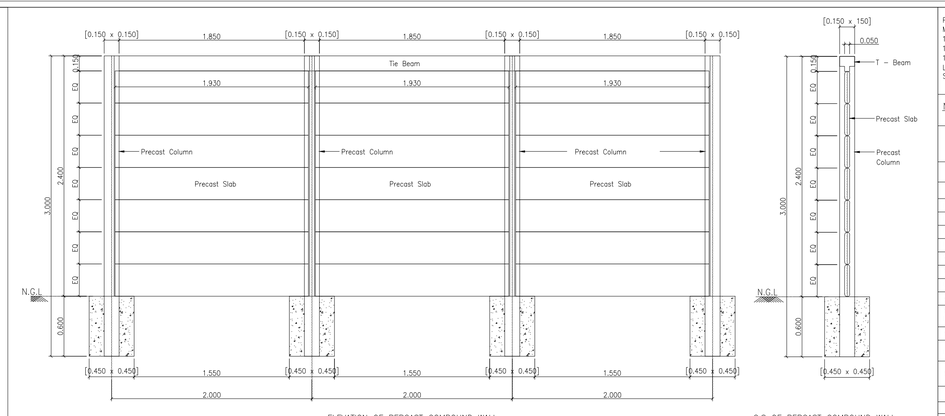

ELEVATION OF PERCAST COMPOUND WALL

C.S OF PERCAST COMPOUND WALL

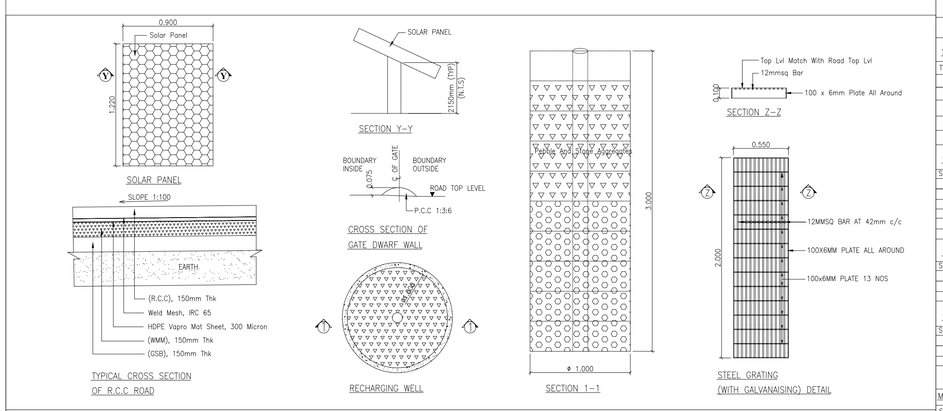

TYPICAL CROSS SECTION OF R.C.C ROAD

CROSS SECTION OF GATE DWARF WALL

RECHARGING WELL

SECTION 1–1

STEEL GRATING (WITH GALVANAISING) DETAIL

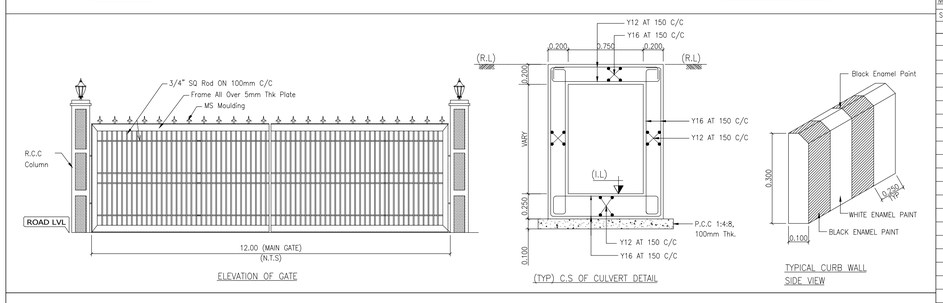

ELEVATION OF GATE

(TYP) C.S OF CULVERT DETAIL

TYPICAL CURB WALL SIDE VIEW

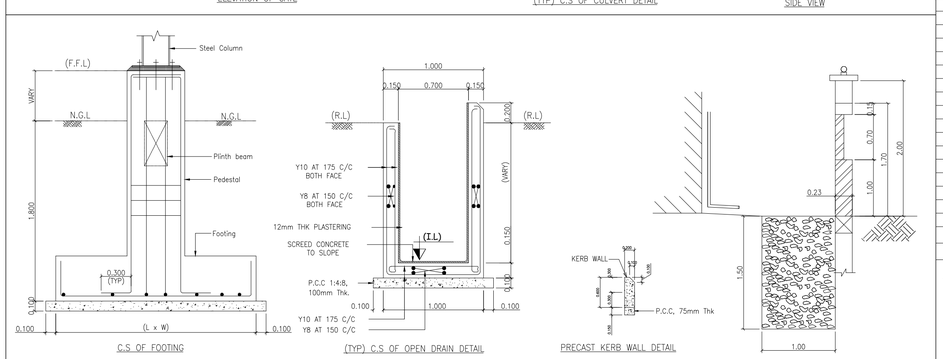

C.S OF FOOTING

(TYP) C.S OF OPEN DRAIN DETAIL

PRECAST KERB WALL DETAIL

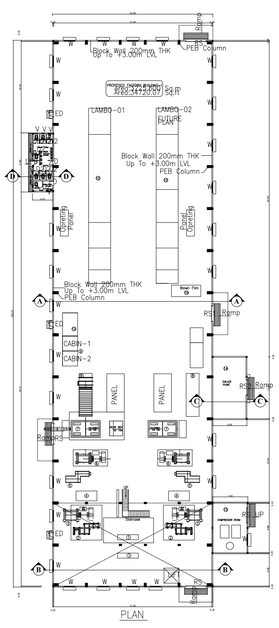
PLAN

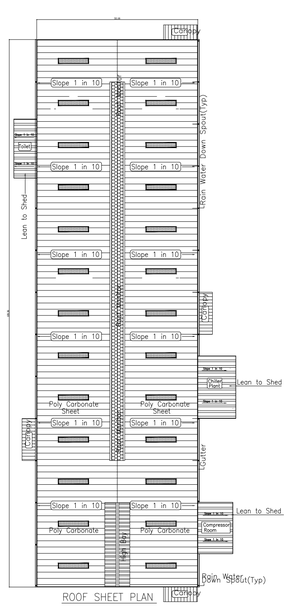
ROOF SHEET PLAN

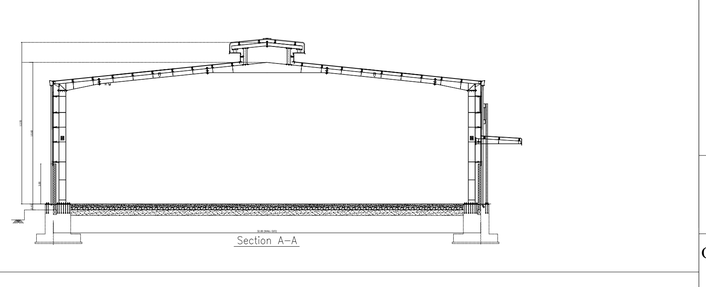
Section A–A

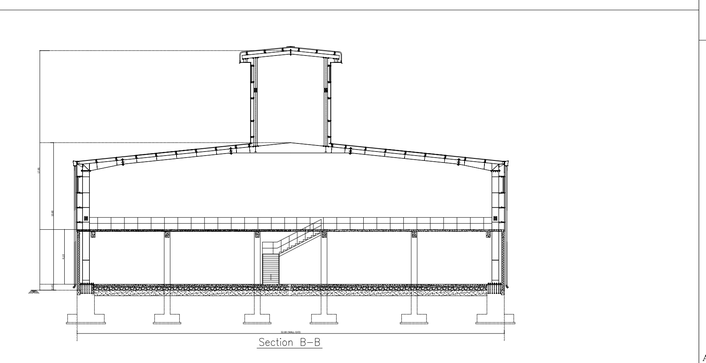
Section B–B

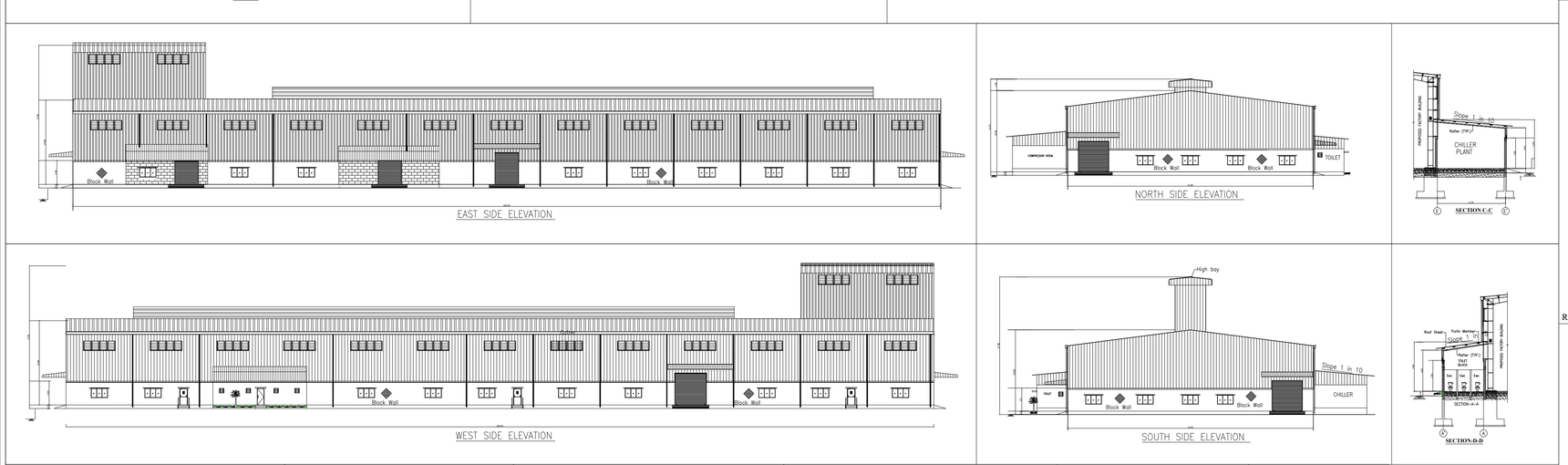
EAST SIDE ELEVATION

NORTH SIDE ELEVATION

SECTION C–C

WEST SIDE ELEVATION

SOUTH SIDE ELEVATION

SECTION D–D

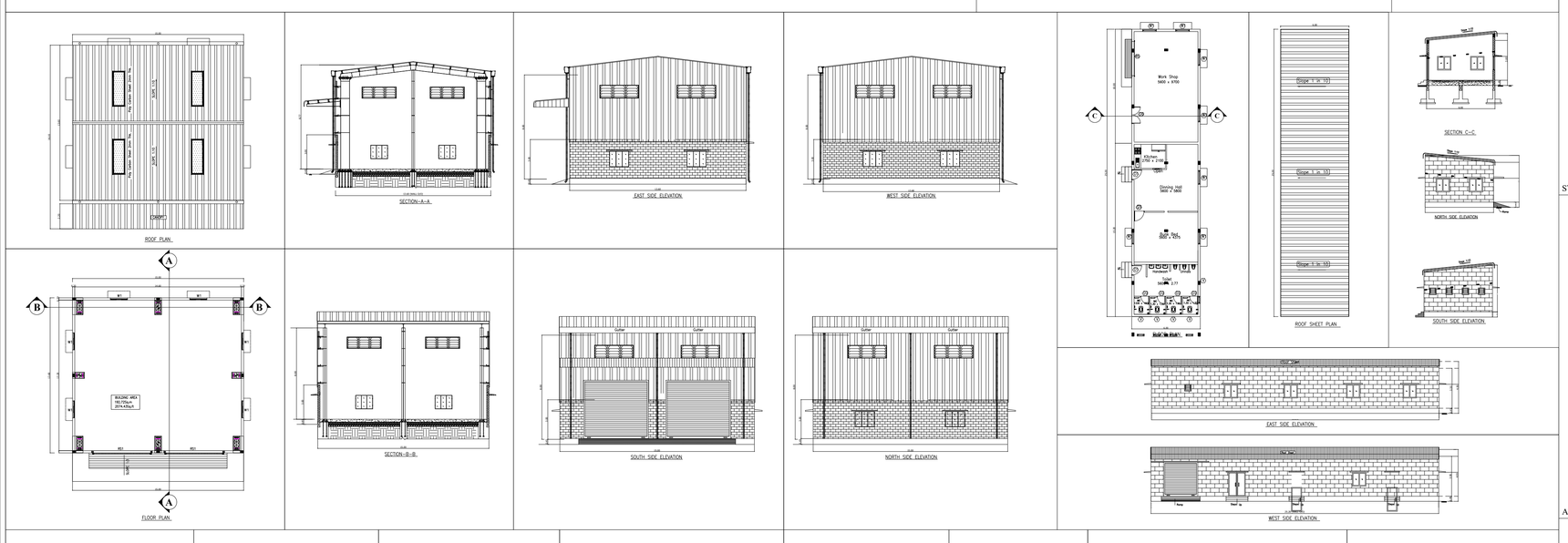
ROOF PLAN

SECTION–A–A

EAST SIDE ELEVATION

WEST SIDE ELEVATION

FLOOR PLAN

SECTION–B–B

SOUTH SIDE ELEVATION

NORTH SIDE ELEVATION

ROOF PLAN

SECTION C–C

NORTH SIDE ELEVATION

SOUTH SIDE ELEVATION

EAST SIDE ELEVATION

WEST SIDE ELEVATION

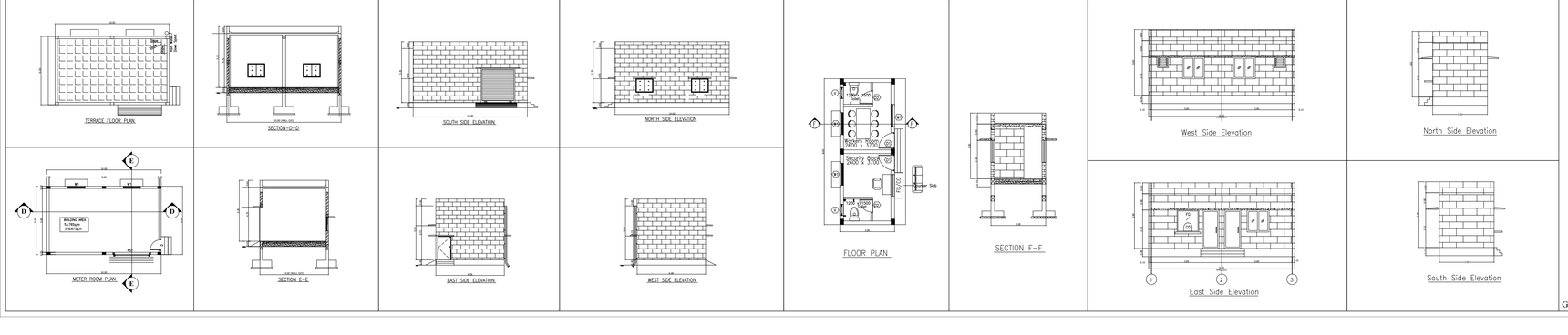
TERRACE FLOOR PLAN

SECTION–D–D

SOUTH SIDE ELEVATION

NORTH SIDE ELEVATION

METER ROOM PLAN

SECTION E–E

EAST SIDE ELEVATION

WEST SIDE ELEVATION

FLOOR PLAN

SECTION F–F

West Side Elevation

North Side Elevation

East Side Elevation

South Side Elevation

THE LANDLENS SUITE

Eight ways to know a piece of land before you pay for it.

This report covers one part of the picture. These cover the rest, drawn from the same government records, for any property in Tamil Nadu.

LandLens One
Ask anything about a property and get an answer grounded in live government records, with the sources shown.
/landlens/one

Verify My Land
Every record check run on one property and returned as a single report.
/landlens/verify-my-land

Legal Opinion
An advocate's written opinion on the title, built on the records we pull for it.
/landlens

One Map
Every layer on one map: the parcel, its boundary, zoning, water bodies and what sits around it.
/landlens/one/map

PriceMap
What land actually changed hands for around this plot, taken from the registered deeds.
/landlens/pricemap

Build Scope
What you are allowed to build here: floor space, height, coverage and setbacks.
/landlens/build-scope

Property Tracker
Watch a property and hear about it when something new is registered against it.
/landlens/property-tracker

Deal Room
Run the transaction in one place: documents, stamping, signatures and the parties.
/landlens/deal-room

hello@verified.realestate · +91 9996 12 9996

FREE TOOLS · NO ACCOUNT NEEDED

Twenty-four checks you can run yourself, at no cost.

Records and verification

The registers themselves, read for you.

- Encumbrance Certificate
- Patta and Chitta
- Field Measurement Sketch
- EC Analyzer
- Bank charge check
- Court case search
- Seller background check
- Approval check by survey

Value and duty

What it is worth and what it costs to register.

- Guideline value by street
- Guideline value by survey
- Stamp duty and registration fees
- Capital gains
- Floor space index
- Area unit converter

Zoning and land use

What the plan says can happen on this land.

- Land use zone finder
- CMDA land use check
- Coastal regulation zone
- Master plan check
- Water bodies finder
- Airport height clearance

Registers and directories

Who holds it, and which office keeps the record.

- Find your registering office
- Temple property check
- Waqf property check
- RERA register

Every free tool
/tools

Services we run for you
/services

The LandLens suite
/landlens/one

Verified RealEstate™

Every claim in this document traces back to a government record.

- Legal opinions, due diligence and title verification
- Building plan, layout and sub-division approvals
- Completion and occupancy certificates, regularisation
- Escrow, negotiation and NRI property management
- Land survey, soil testing, architecture and construction

Verified RealEstate
3/350/2 Mettukuppam,
OMR Thoraipakkam,
Chennai 600 097, India
hello@verified.realestate
+91 9996 12 9996

Prepared from the registers named on the page each finding sits on. Where a register could not be read, this document says so in its place rather than leaving the gap to be read as a clean result.