PP APPROVAL RECORD

# Planning Permission

Paramankurichi

Thoothukkudi district, Tamil Nadu

APPROVAL TYPE
**Building Plan**

ISSUING AUTHORITY
**Rural Panchayat**

PURPOSE
**Residential**

The approval as the planning authority issued it, reproduced in full behind this page.

An approval speaks to what was sanctioned, not to what was built. Completion is a separate record.

PLAN for THE PROPOSED CONSTRUCTION OF HOUSE After Desmentel IN door no : 10/22,

NEW SURVEY NO-690/18, OLD S.NO: 240/1B2, as per Patta no-528, POTHARANGANVILAI EAST STREET AT PARAMANKURICHI VILLAGE PANCHAYAT,UDANGUDI UNION, TIRUCHENDUR TALUK, THOOTHUKUDI DISTRICT.

APPLICANT NAME:- Mr. B. JOSEPH

PLACE :- POTHARANGANVILAI EAST STREET

SCALE 1:100

COLOUR INDEX
- PROPOSED SITE
- EXG. ROAD

ALL DIMENSIONS ARE IN METER

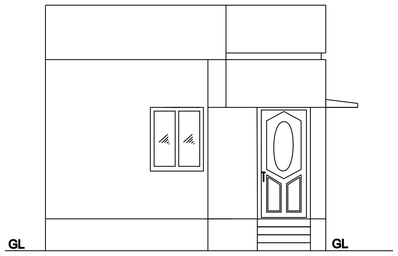


ELEVATION

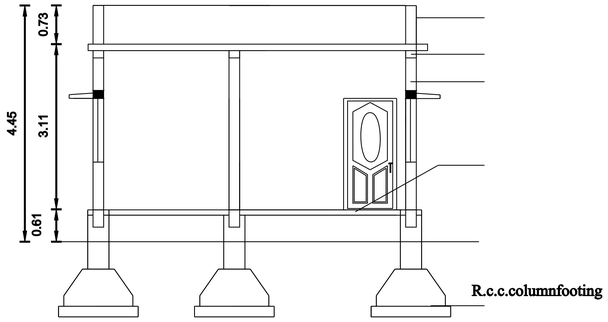


SECTION-AA

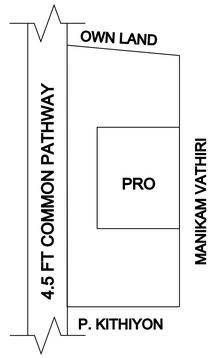


LOCATION PLAN

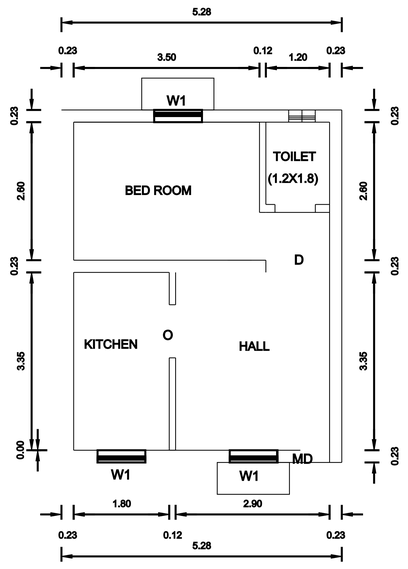


PLAN

N

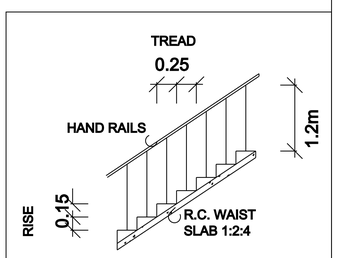


STAIRCASE DETAILS

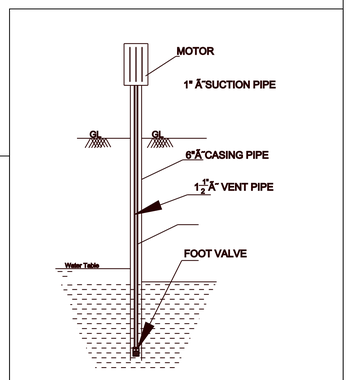


SEC. OF BOREWELL

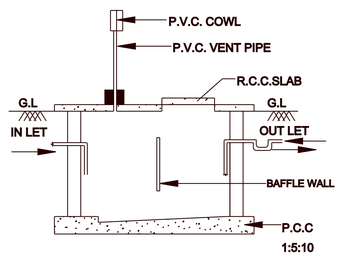


SEC. OF SEPTIC TANK

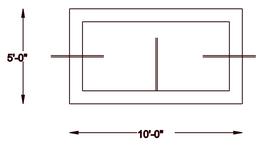


PLAN OF SEPTIC TANK

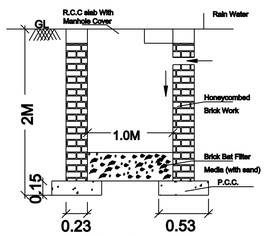


Details Of Rain Water Collection Pit (Recharge Well Method)
SCALE:- 1"=4'0"

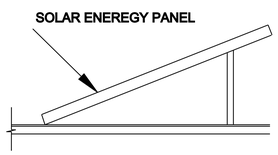


SYSTEM GENERAL POWER
SCALE- N.T.S

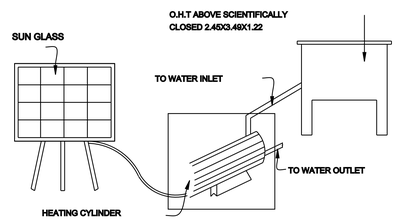


SOLAR WATER HEATING SYSTEM

AREA STATEMENT

| DESCRIPTION | SQ.FT | SQ.M |
|---|---|---|
| SITE EXTENT (DOC) | 1274.78 | 118.43 |
| SITE EXTENT-Patta | 1280.91 | 119.00 |
| PRO-PLINTH AREA | 377.38 | 35.06 |
| CARPET AREA | 320.65 | 29.79 |
| OPEN SPACE AREA | 897.39 | 83.37 |

FSI: 0.29 | PLOT COVERAGE : 29%

SCHEDULE OF JOINERIES

| TYPE | DESCRIPTION | SIZE |
|---|---|---|
| D | MAIN DOOR | 1.00X2.10 |
| D1 | DOOR | 0.90X2.10 |
| D2 | DOOR | 0.75X2.10 |
| W | WINDOW | 1.50X1.50 |
| KW | KITCHEN WINDOW | 1.50X0.90 |
| V | VENTILATOR | 0.90X0.60 |

Mr. B. JOSEPH



Er. J. Edison. DCE,
Register Enginer
D.D(P) Tuty, Reg.No-6/LS/2022
Fashion Planners
17B, south Bazaar, udangudi-628203
Mob:9842516670

LICENSED SURVEYOR

THE LANDLENS SUITE

# Eight ways to know a piece of land before you pay for it.

This report covers one part of the picture. These cover the rest, drawn from the same government records, for any property in Tamil Nadu.

### LandLens One
Ask anything about a property and get an answer grounded in live government records, with the sources shown.
**/landlens/one**

### Verify My Land
Every record check run on one property and returned as a single report.
**/landlens/verify-my-land**

### Legal Opinion
An advocate's written opinion on the title, built on the records we pull for it.
**/landlens**

### One Map
Every layer on one map: the parcel, its boundary, zoning, water bodies and what sits around it.
**/landlens/one/map**

### PriceMap
What land actually changed hands for around this plot, taken from the registered deeds.
**/landlens/pricemap**

### Build Scope
What you are allowed to build here: floor space, height, coverage and setbacks.
**/landlens/build-scope**

### Property Tracker
Watch a property and hear about it when something new is registered against it.
**/landlens/property-tracker**

### Deal Room
Run the transaction in one place: documents, stamping, signatures and the parties.
**/landlens/deal-room**

FREE TOOLS · NO ACCOUNT NEEDED

# Twenty-four checks you can run yourself, at no cost.

## Records and verification

The registers themselves, read for you.

- Encumbrance Certificate
- Patta and Chitta
- Field Measurement Sketch
- EC Analyzer
- Bank charge check
- Court case search
- Seller background check
- Approval check by survey

## Value and duty

What it is worth and what it costs to register.

- Guideline value by street
- Guideline value by survey
- Stamp duty and registration fees
- Capital gains
- Floor space index
- Area unit converter

## Zoning and land use

What the plan says can happen on this land.

- Land use zone finder
- CMDA land use check
- Coastal regulation zone
- Master plan check
- Water bodies finder
- Airport height clearance

## Registers and directories

Who holds it, and which office keeps the record.

- Find your registering office
- Temple property check
- Waqf property check
- RERA register

**Every free tool**
/tools

**Services we run for you**
/services

**The LandLens suite**
/landlens/one

Verified RealEstate™

# Every claim in this document traces back to a government record.

- Legal opinions, due diligence and title verification
- Building plan, layout and sub-division approvals
- Completion and occupancy certificates, regularisation
- Escrow, negotiation and NRI property management
- Land survey, soil testing, architecture and construction

**Verified RealEstate**
3/350/2 Mettukuppam,
OMR Thoraipakkam,
Chennai 600 097, India
**hello@verified.realestate**
+91 9996 12 9996

Prepared from the registers named on the page each finding sits on. Where a register could not be read, this document says so in its place rather than leaving the gap to be read as a clean result.