PP APPROVAL RECORD

Planning Permission

Thoothukkudi district, Tamil Nadu

APPROVAL TYPE
Building Plan

ISSUING AUTHORITY
Rural Panchayat

The approval as the planning authority issued it, reproduced in full behind this page.

An approval speaks to what was sanctioned, not to what was built. Completion is a separate record.

Verified RealEstate™
3/350/2 Mettukuppam,
OMR Thoraipakkam,
Chennai 600 097, India

hello@verified.realestate
+91 9996 12 9996
verified.realestate

PLAN SHOWING THE PROPOSED CONSTRUCTION OF A STORE ROOM BUILDING IN SURVEY NO:34/5C3,35/3B1,36/1C1, PATTA NO-2377,2376,576, AT INAMMANIYACHI VILLAGE & PANCHAYAT, KOVILPATTI UNION & TALUK, THOOTHUKUDI DISTRICT.

APPLICANT'S NAME ; Mr.N.VENUGOPAL, S/o.Thiru.NAVANEETHA GOPALSAMY,
Mrs.L.PADMAVATHI, W/o.Thiru.N.VENUGOPAL,

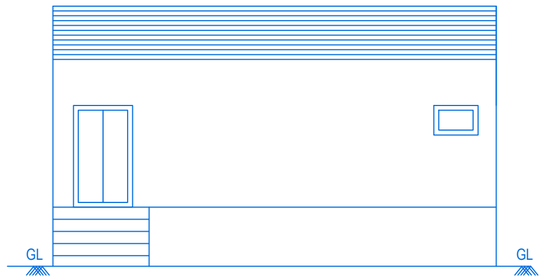

FRONT ELEVATION

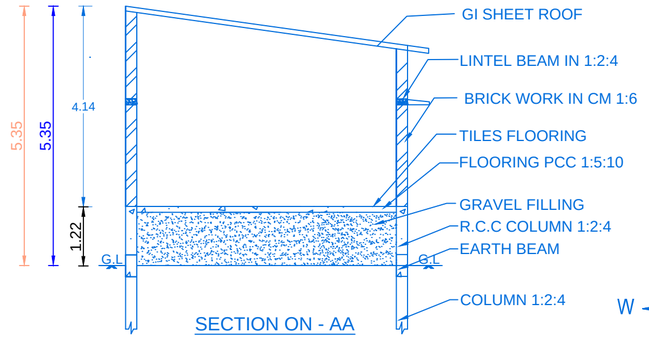

SECTION ON - AA

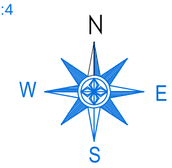

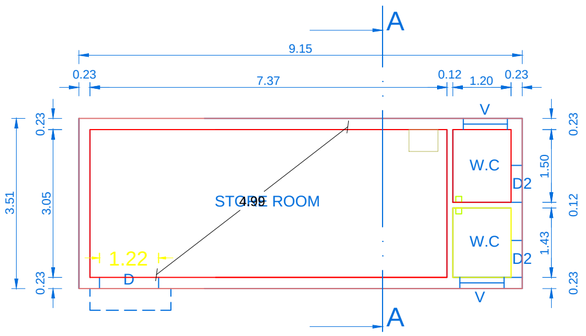

PLAN

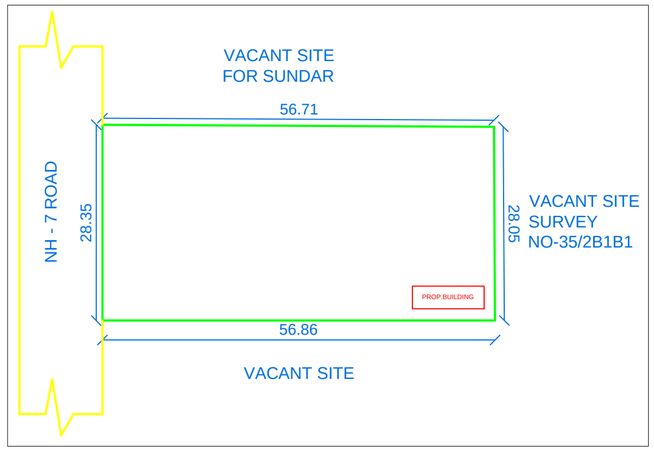

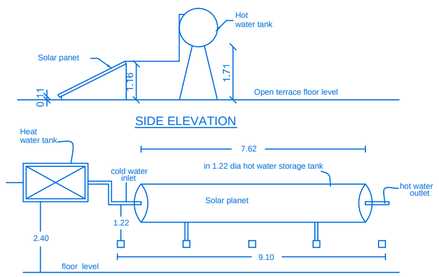

SIDE ELEVATION

SOLAR WATER HEATER PLANT

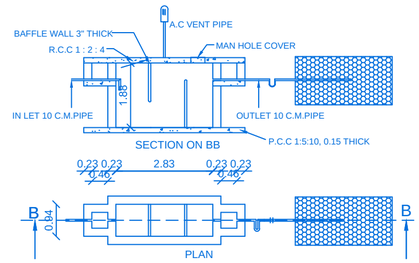

SEPTIC TANK AND TRENCH & U TRAP ADOPTED

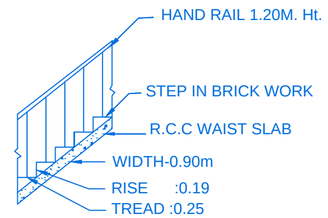

STAIR DETAIL

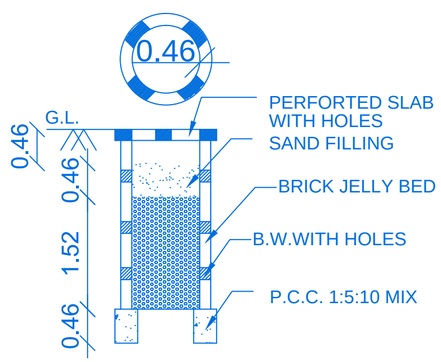

PERCOLATION PIT

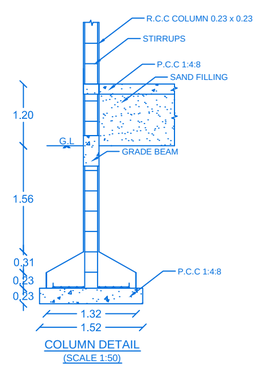

COLUMN DETAIL
(SCALE 1:50)

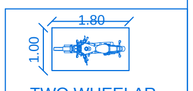

TWO WHEELAR
POCKET DETAILS

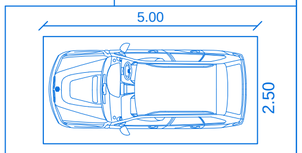

CAR POCKET DETAILS

ALL DIMENSIONS ARE IN METRE
SCALE 1:100

COLOR INDEX	
PARTY'S SITE	
PROPOSED BUILDING	
EXG. BUILDINGS	
ROAD AND STREET	

AREA DETAILS

AREA	SQ.MT.	SQ.FT.
AREA OF SITE	1572.05	16921.58
PROP.STORE ROOM (G.F)	32.12	345.74
AREA OF OPEN TO SKY	1539.93	16575.84

JOINERY DETAILS

SYMBOLS	DESCRIPTION	SIZES
RS	ROLLING SHUTTER	1.20 x 2.10
D1	DOOR	1.00 x 2.10
D2	DOOR	0.76 x 2.10
W1	WINDOW	1.50 x 0.90
W2	WINDOW	1.20 x 1.20
W3	WINDOW	1.37 x 1.20
V	VENTILATOR	0.91 x 0.61

NOTE:
TO PROVIDE RAIN WATER HARVESTING ARRANGMENTS IN THE PROPOSAL CONSTRUCTION AS PER PLAN

N. Venugopal
L. Padmavathy

APPLICANT

Er. **D. KALIRAJ**, B.E.,
Consulting Engineer & Licensed Surveyor
Regn. No. 137/LS/2019/00008
KSJ Engineering Constructions
159/C3, Vijayapuri V.E.P. Complex,
First Floor, KOVILPATTI - 628 501.
Cell No: 90425 38025

REGISTERED ENGINEER

THE LANDLENS SUITE

Eight ways to know a piece of land before you pay for it.

This report covers one part of the picture. These cover the rest, drawn from the same government records, for any property in Tamil Nadu.

LandLens One
Ask anything about a property and get an answer grounded in live government records, with the sources shown.
/landlens/one

Verify My Land
Every record check run on one property and returned as a single report.
/landlens/verify-my-land

Legal Opinion
An advocate's written opinion on the title, built on the records we pull for it.
/landlens

One Map
Every layer on one map: the parcel, its boundary, zoning, water bodies and what sits around it.
/landlens/one/map

PriceMap
What land actually changed hands for around this plot, taken from the registered deeds.
/landlens/pricemap

Build Scope
What you are allowed to build here: floor space, height, coverage and setbacks.
/landlens/build-scope

Property Tracker
Watch a property and hear about it when something new is registered against it.
/landlens/property-tracker

Deal Room
Run the transaction in one place: documents, stamping, signatures and the parties.
/landlens/deal-room

FREE TOOLS · NO ACCOUNT NEEDED

Twenty-four checks you can run yourself, at no cost.

Records and verification

The registers themselves, read for you.

- Encumbrance Certificate
- Patta and Chitta
- Field Measurement Sketch
- EC Analyzer
- Bank charge check
- Court case search
- Seller background check
- Approval check by survey

Value and duty

What it is worth and what it costs to register.

- Guideline value by street
- Guideline value by survey
- Stamp duty and registration fees
- Capital gains
- Floor space index
- Area unit converter

Zoning and land use

What the plan says can happen on this land.

- Land use zone finder
- CMDA land use check
- Coastal regulation zone
- Master plan check
- Water bodies finder
- Airport height clearance

Registers and directories

Who holds it, and which office keeps the record.

- Find your registering office
- Temple property check
- Waqf property check
- RERA register

Every free tool
/tools

Services we run for you
/services

The LandLens suite
/landlens/one

Verified RealEstate™

Every claim in this document traces back to a government record.

- Legal opinions, due diligence and title verification
- Building plan, layout and sub-division approvals
- Completion and occupancy certificates, regularisation
- Escrow, negotiation and NRI property management
- Land survey, soil testing, architecture and construction

Verified RealEstate
3/350/2 Mettukuppam,
OMR Thoraipakkam,
Chennai 600 097, India
hello@verified.realestate
+91 9996 12 9996

Prepared from the registers named on the page each finding sits on. Where a register could not be read, this document says so in its place rather than leaving the gap to be read as a clean result.