Verified RealEstate™

REFERENCE
08/2025-26

ISSUED
20 September 2025

PP APPROVAL RECORD

# Planning Permission

Thoothukkudi district, Tamil Nadu

APPROVAL TYPE
**Building Plan**

ISSUING AUTHORITY
**Rural Panchayat**

The approval as the planning authority issued it, reproduced in full behind this page.

An approval speaks to what was sanctioned, not to what was built. Completion is a separate record.

Verified RealEstate™
3/350/2 Mettukuppam,
OMR Thoraipakkam,
Chennai 600 097, India

hello@verified.realestate
+91 9996 12 9996
verified.realestate

DIGITALLY VERIFIED RECORD

# PLAN SHOWING THE PROPOSED CONSTRUCTION OF AC SHEET ROOF RESIDENTIAL BUILDING IN S.NO: 78/2B , PATTA NO : 3005 , VEMBAR VILLAGE AND PANCHAYAT , VILATHIKULAM TALUK , THOOTHUKUDI DISTRICT.

NAME OF APPLICANT :- Mrs.PONESAKKI , W/O. Mr.GUNASEKAR.

**OFFICE USE:**




## ELEVATION

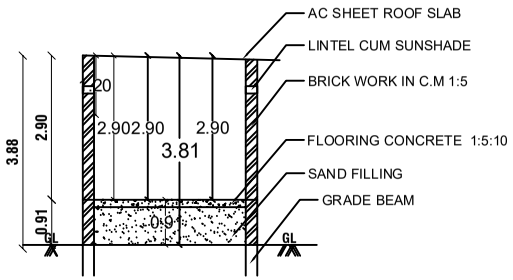


## SECTION-AB

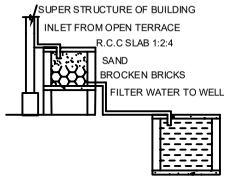


RAINWATER HARVESTING

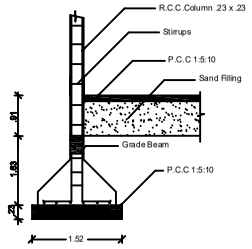


COLUMN DETAIL

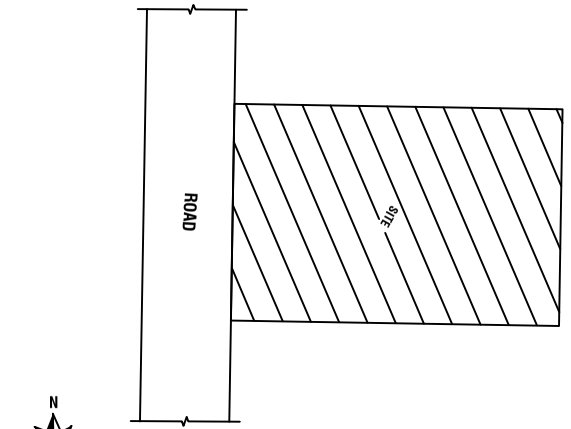


## KEY PLAN (N.T.S)

| SCHEDULE OF JOINERY | | | COLOUR INDEX |
|---|---|---|---|
| MD | MAIN DOOR | 1.00 X 2.13 | PROPOSED |
| A/O | ARCH OPEN | 0.91 X 2.13 | |
| D1 | DOOR | 0.91 X 2.13 | |
| D2 | DOOR | 0.76 X 2.13 | ROAD |
| W | WINDOW | 1.52 X 1.22 | |
| J | JOLLY | 1.52 X 1.22 | SITE BOUNDARY |
| V | VENTILATOR | 0.76 X 0.76 | |

| AREA DETAILS | SQ.MT | SQ.FT |
|---|---|---|
| PLOT AREA(AS PER DOCUMENT) | 1052.08 | 11325.6 |
| PLOT AREA(AS PER SUPERIMPOSED) | 1052.08 | 11325.6 |
| PLINTH AREA | 18.99 | 204.4 |
| OPEN SPACE | 1033.09 | 11121.2 |
| | 0.01 | |

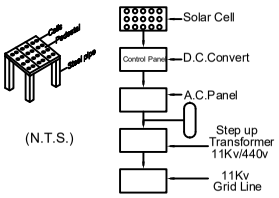


SOLAR SYSTEM FLOW DIAGRAM

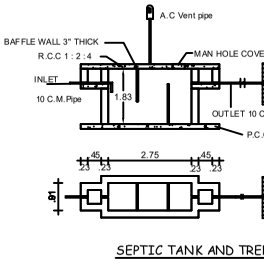


SEPTIC TANK AND TRE

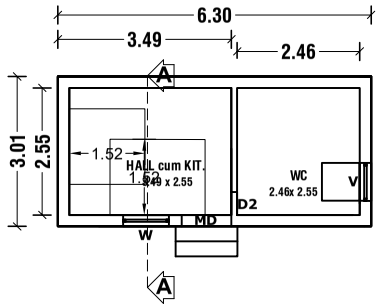


## PLAN

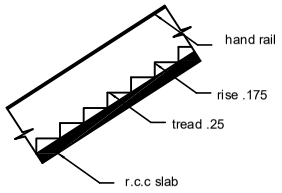


STAIR

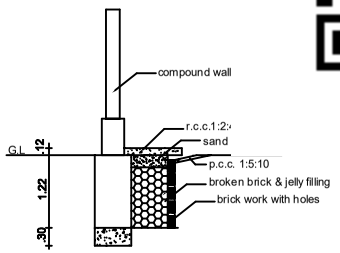


PLINTH BOUNDARY PERCOLATION PIT

SAKKI
GNATURE

JESH ,B.E
neer.Gr-III
/00007
JENI CONSTRUCTION ,
VEMBAR-628906.
Cell : 84896 26700.

REGISTERED ENGINEER

THE LANDLENS SUITE

# Eight ways to know a piece of land before you pay for it.

This report covers one part of the picture. These cover the rest, drawn from the same government records, for any property in Tamil Nadu.

### LandLens One
Ask anything about a property and get an answer grounded in live government records, with the sources shown.
**/landlens/one**

### Verify My Land
Every record check run on one property and returned as a single report.
**/landlens/verify-my-land**

### Legal Opinion
An advocate's written opinion on the title, built on the records we pull for it.
**/landlens**

### One Map
Every layer on one map: the parcel, its boundary, zoning, water bodies and what sits around it.
**/landlens/one/map**

### PriceMap
What land actually changed hands for around this plot, taken from the registered deeds.
**/landlens/pricemap**

### Build Scope
What you are allowed to build here: floor space, height, coverage and setbacks.
**/landlens/build-scope**

### Property Tracker
Watch a property and hear about it when something new is registered against it.
**/landlens/property-tracker**

### Deal Room
Run the transaction in one place: documents, stamping, signatures and the parties.
**/landlens/deal-room**

FREE TOOLS · NO ACCOUNT NEEDED

# Twenty-four checks you can run yourself, at no cost.

## Records and verification

The registers themselves, read for you.

- Encumbrance Certificate
- Patta and Chitta
- Field Measurement Sketch
- EC Analyzer
- Bank charge check
- Court case search
- Seller background check
- Approval check by survey

## Value and duty

What it is worth and what it costs to register.

- Guideline value by street
- Guideline value by survey
- Stamp duty and registration fees
- Capital gains
- Floor space index
- Area unit converter

## Zoning and land use

What the plan says can happen on this land.

- Land use zone finder
- CMDA land use check
- Coastal regulation zone
- Master plan check
- Water bodies finder
- Airport height clearance

## Registers and directories

Who holds it, and which office keeps the record.

- Find your registering office
- Temple property check
- Waqf property check
- RERA register

**Every free tool**
/tools

**Services we run for you**
/services

**The LandLens suite**
/landlens/one

Verified RealEstate™

# Every claim in this document traces back to a government record.

- Legal opinions, due diligence and title verification
- Building plan, layout and sub-division approvals
- Completion and occupancy certificates, regularisation
- Escrow, negotiation and NRI property management
- Land survey, soil testing, architecture and construction

**Verified RealEstate**
3/350/2 Mettukuppam,
OMR Thoraipakkam,
Chennai 600 097, India
**hello@verified.realestate**
+91 9996 12 9996

Prepared from the registers named on the page each finding sits on. Where a register could not be read, this document says so in its place rather than leaving the gap to be read as a clean result.