Verified RealEstate™

REFERENCE
2026-2027

ISSUED
03 November 2026

PP APPROVAL RECORD

Planning Permission

Survey 116/3A1 and 1 more

Kalingamudayanpatty, iyanpatti Village and Panchayat Thuraiyur taluk

Tiruchirappalli district, Tamil Nadu

APPROVAL TYPE
Building Plan

ISSUING AUTHORITY
Rural Panchayat

The approval as the planning authority issued it, reproduced in full behind this page.

An approval speaks to what was sanctioned, not to what was built. Completion is a separate record.

Verified RealEstate™
3/350/2 Mettukuppam,
OMR Thoraipakkam,
Chennai 600 097, India

hello@verified.realestate
+91 9996 12 9996
verified.realestate

DIGITALLY VERIFIED RECORD

PLAN SHOWING THE PROPOSED CONSTRUCTION OF GROUND FLOOR R.C.C ROOF COMMERCIAL BUILDING IN OLD S.F NO: 116/3A, NEW S.F NO: 116/3A1, PATTA NO: 3021, SENAPPANALLUR ROAD, AT KALINGAMUDAIYANPATTI VILLAGE PANCHAYAT, THURAIYUR TALUK, TRICHY DISTRICT.

OWNER : Mr.M.SELVAKUMAR, S/O.V.MURUGESAN

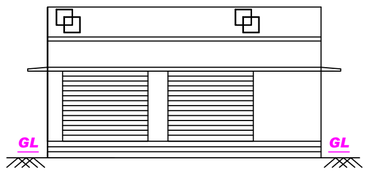

FRONT ELEVATION

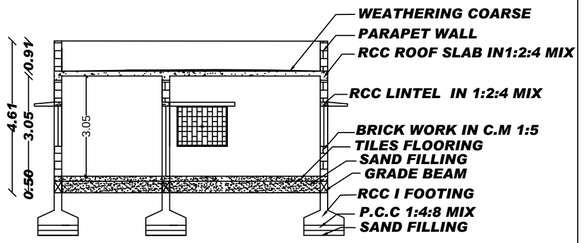

SECTION ON 'AB'

LOCATION PLAN

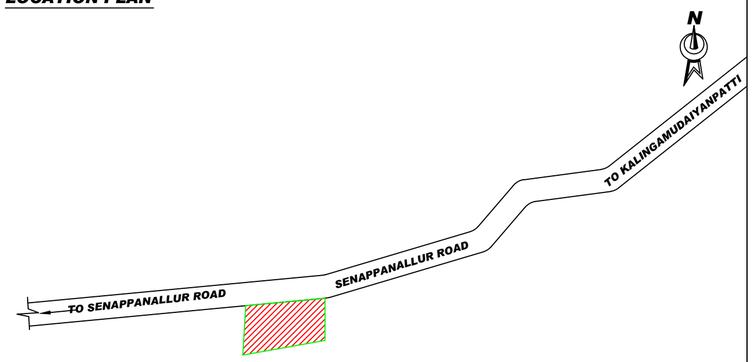

NOT TO SCALE

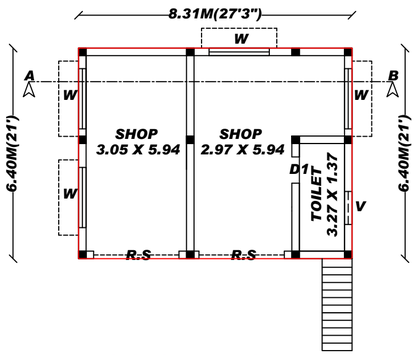

PRO.GROUND FLOOR PLAN

SITE PLAN :

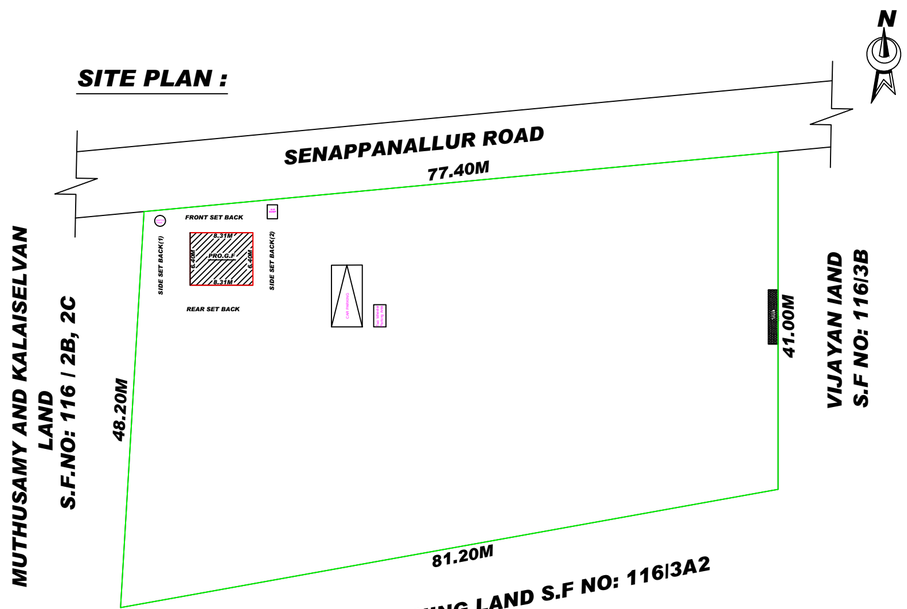

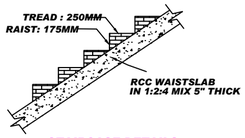

STAIRCASE DETAILS

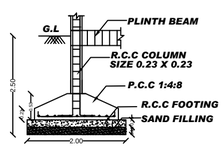

TYPICAL SECTION OF
R.C.C COLOUMN FOOTING

A



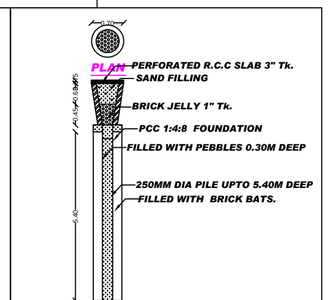

PERCOLATION PIT
SECTION OF RAIN WATER

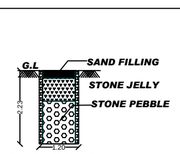

DETAILS OF RAIN
WATER HARVESTING

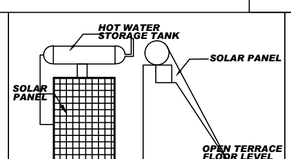

PLAN SIDE ELEVATION

SOLAR SYSTEM DETAILS

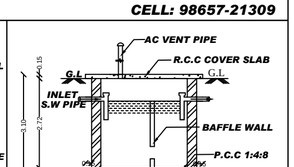

SAEPTIC TANK DETAILS

DRAWN ON BY:

SHAYANA
CONSTRUCTION
CELL: 98657-21309

SCHEDULE OF JOINERY

TYPE	DISCRIPTION	SIZE IN 'METER'
M.D	MAIN DOOR	1.22 x 2.13
D	FLUSH DOOR	0.91 x 2.13
D1	FLUSH DOOR	0.76 x 2.13
O	OPEN	1.00 x 2.13
W	WINDOW	1.53 x 1.22
K.W	KITCHEN WINDOW	1.22 x 0.91
V	VENTILATOR	1.00 x 0.61

AREA DETAILS	SQ.M	SQ.FT
AS PER DOCUMENT(74 CENT)	3000.00	32280.00
AS PER Patta (74 CENT)	3000.00	32280.00
AS PER FMB (87 CENT)	3536.78	38055.75

PROPOSED BUILDING AREA DETAILS

DESCRIPTION	SQ.M	SQ.FT
PRO.GROUND FLOOR AREA	53.18	572.22
PRO.FIRST FLOOR AREA	-----	-----
TOTAL AREA	53.18	572.22

TOTAL FSI AREA = 53.18 SQM

FLOOR SPACE INDEX = 53.18 / 3000.00 = 0.014 < 2

PLOT COVERAGE = 53.18 / 3000.00 X 100 = 1.43%

NOTES:

1. ALL DIMENSION ARE IN "METER"
2. WASTE WATER UTILISED FOR GARDEN PURPOSE.
3. SOLAR WATER HEATER PROVIDED IN TERRACE FLOOR.

OWNER

Mr.M.SELVAKUMAR,

REGISTERED ENGINEER

Er.C.RAVI,ME.,M.Sc(val).,
STRUCTURAL ENGINEER GRADE I - SE
Reg.No: 087/LS/2019/00019
NO.56, Thuraiyur Main Road,
Opp.to Petrol Bunk,Thathiengarplet
Musiri Taluk - 621214.
CELL : 9790536945,9443204381.

THE LANDLENS SUITE

Eight ways to know a piece of land before you pay for it.

This report covers one part of the picture. These cover the rest, drawn from the same government records, for any property in Tamil Nadu.

LandLens One
Ask anything about a property and get an answer grounded in live government records, with the sources shown.
/landlens/one

Verify My Land
Every record check run on one property and returned as a single report.
/landlens/verify-my-land

Legal Opinion
An advocate's written opinion on the title, built on the records we pull for it.
/landlens

One Map
Every layer on one map: the parcel, its boundary, zoning, water bodies and what sits around it.
/landlens/one/map

PriceMap
What land actually changed hands for around this plot, taken from the registered deeds.
/landlens/pricemap

Build Scope
What you are allowed to build here: floor space, height, coverage and setbacks.
/landlens/build-scope

Property Tracker
Watch a property and hear about it when something new is registered against it.
/landlens/property-tracker

Deal Room
Run the transaction in one place: documents, stamping, signatures and the parties.
/landlens/deal-room

FREE TOOLS · NO ACCOUNT NEEDED

Twenty-four checks you can run yourself, at no cost.

Records and verification

The registers themselves, read for you.

- Encumbrance Certificate
- Patta and Chitta
- Field Measurement Sketch
- EC Analyzer
- Bank charge check
- Court case search
- Seller background check
- Approval check by survey

Value and duty

What it is worth and what it costs to register.

- Guideline value by street
- Guideline value by survey
- Stamp duty and registration fees
- Capital gains
- Floor space index
- Area unit converter

Zoning and land use

What the plan says can happen on this land.

- Land use zone finder
- CMDA land use check
- Coastal regulation zone
- Master plan check
- Water bodies finder
- Airport height clearance

Registers and directories

Who holds it, and which office keeps the record.

- Find your registering office
- Temple property check
- Waqf property check
- RERA register

Every free tool
/tools

Services we run for you
/services

The LandLens suite
/landlens/one

Verified RealEstate™

Every claim in this document traces back to a government record.

- Legal opinions, due diligence and title verification
- Building plan, layout and sub-division approvals
- Completion and occupancy certificates, regularisation
- Escrow, negotiation and NRI property management
- Land survey, soil testing, architecture and construction

Verified RealEstate
3/350/2 Mettukuppam,
OMR Thoraipakkam,
Chennai 600 097, India
hello@verified.realestate
+91 9996 12 9996

Prepared from the registers named on the page each finding sits on. Where a register could not be read, this document says so in its place rather than leaving the gap to be read as a clean result.