Verified RealEstate™

REFERENCE
SWP/BPA/185898/2024

ISSUED
14 June 2024

PP APPROVAL RECORD

Planning Permission

Tirunelveli

Tirunelveli district, Tamil Nadu

APPROVAL TYPE
Building Plan

ISSUING AUTHORITY
DTCP

The approval as the planning authority issued it, reproduced in full behind this page.

An approval speaks to what was sanctioned, not to what was built. Completion is a separate record.

Verified RealEstate™
3/350/2 Mettukuppam,
OMR Thoraipakkam,
Chennai 600 097, India

hello@verified.realestate
+91 9996 12 9996
verified.realestate

DIGITALLY VERIFIED RECORD

PLAN SHOWING THE PROPOSED RE-CONSTRUCTION OF 10 DWELLING UNITS HOUSE BUILDING (AFTER REMOVING THE EXG. BUILDING) IN DOOR NO: C-85, 2nd CROSS STREET, MAHARAJA NAGAR, PLOT NO: C-85, APPROVED LAYOUT IN L.P.H/D.T.P NO:56/62, NEW T.S.NO:128,T.S.WARD :BS, BLOCK:12, OLD T.S.NO:128, T.S.WARD :A, BLOCK :2, S.NO: 242 PART, V.M.CHATHIRAM VILLAGE, HIGH GROUND D.D.PLAN, PALAYAMKOTTAI WARD OFFICE , TIRUNELVELI CITY MUNICIPAL CORPORATION.

All dimension are in Meter, Scale - 1 :100

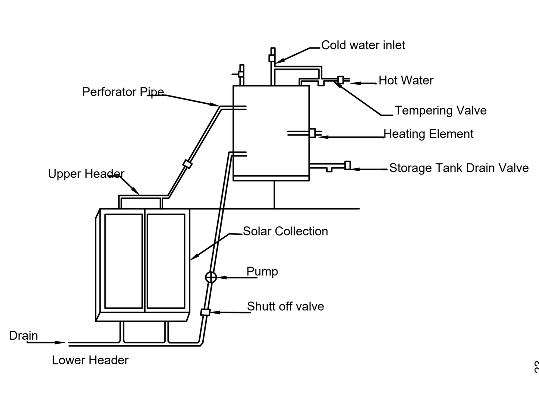

Details Of Solar Water Heater (NTS)

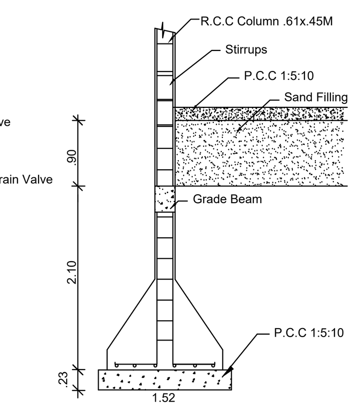

COLUMN DETAIL
SCALE (1:50)

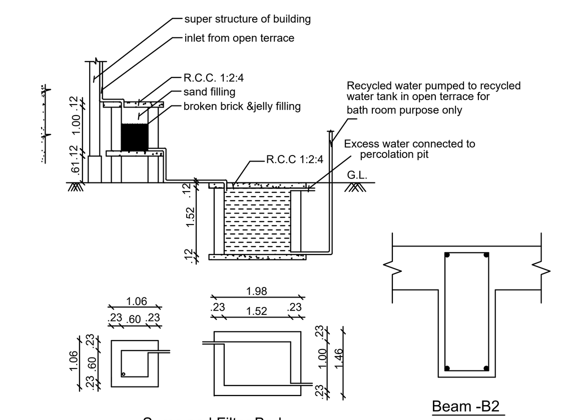

Sump and Filter Bed

Beam -B2

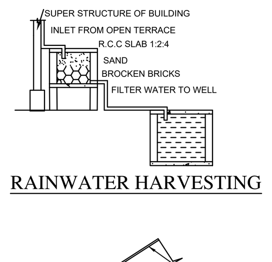

RAINWATER HARVESTING

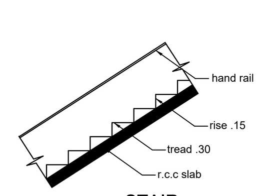

STAIR

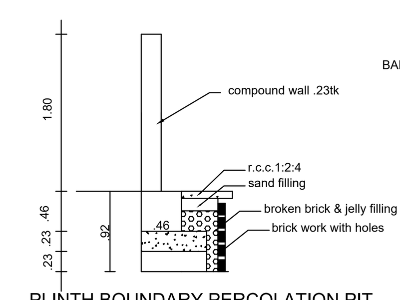

PLINTH BOUNDARY PERCOLATION PIT
SCALE (1:50)

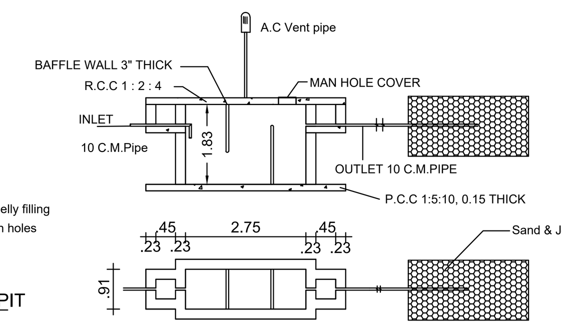

SEPTIC TANK AND TRENCH

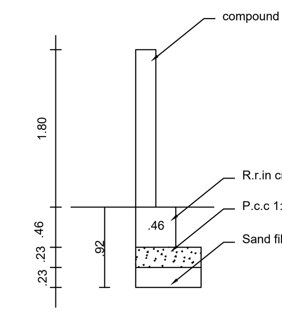

Compound Wall Detail
SCALE :(1:50)

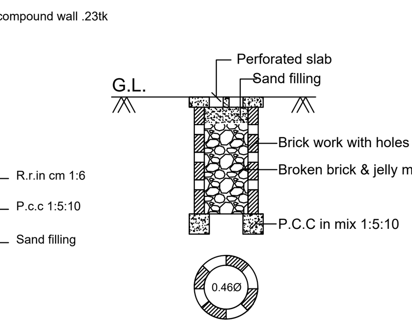

PERCOLATION PIT FOR 30 Sq. m.
(NOT FOR SCALE)

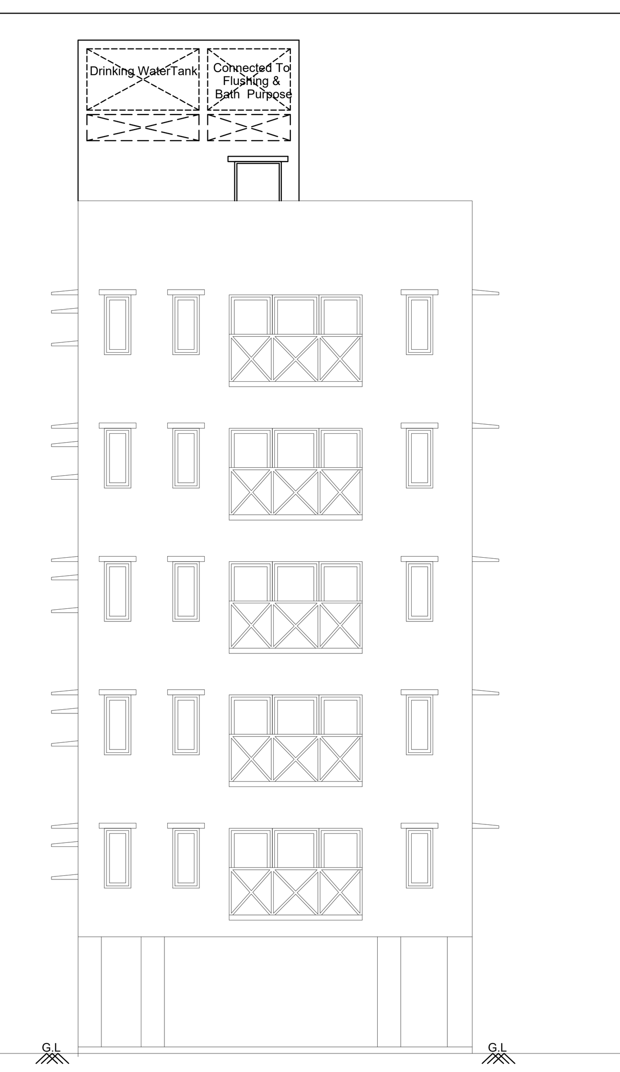

ELEVATION

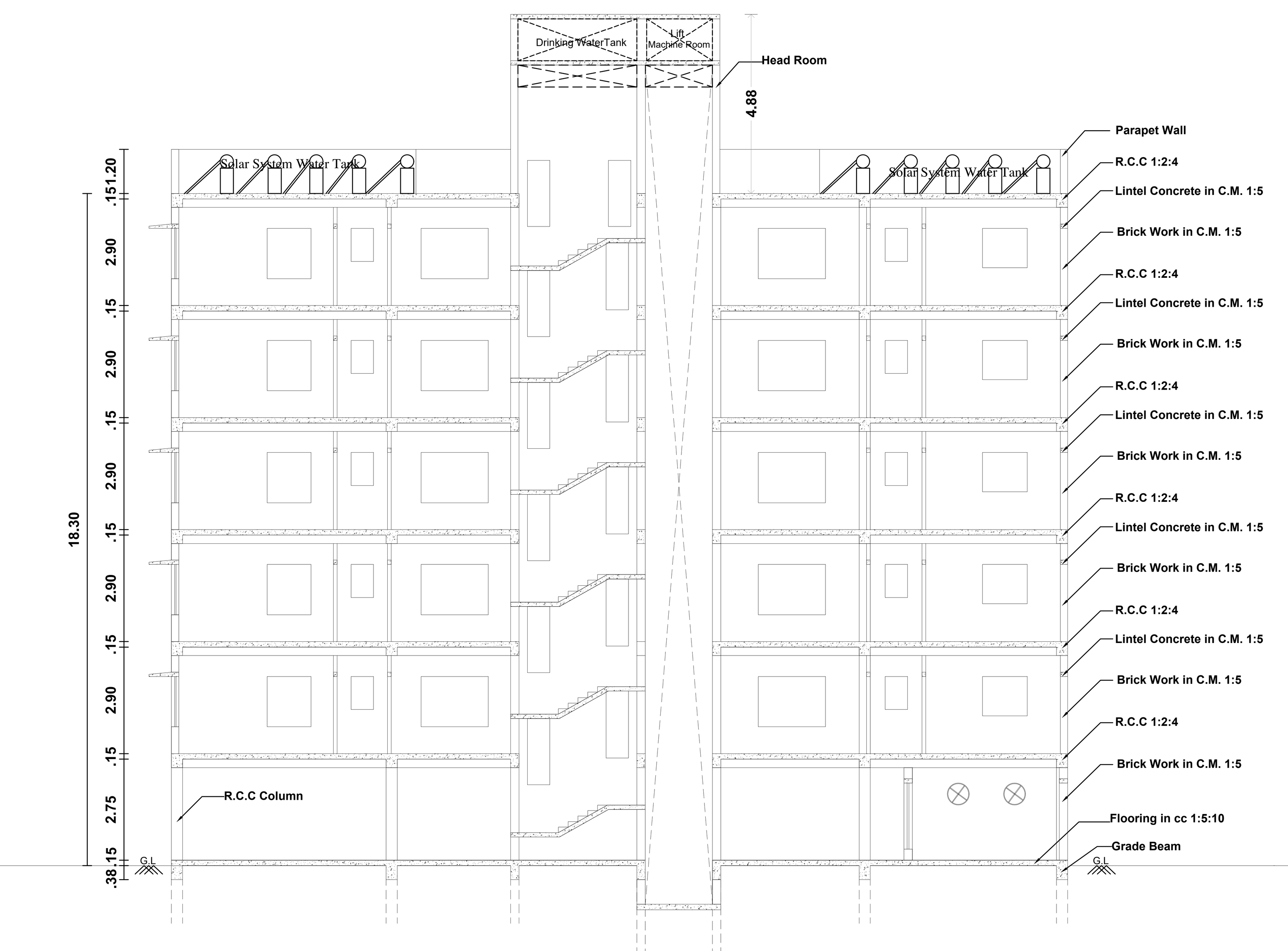

SECTION " AB "

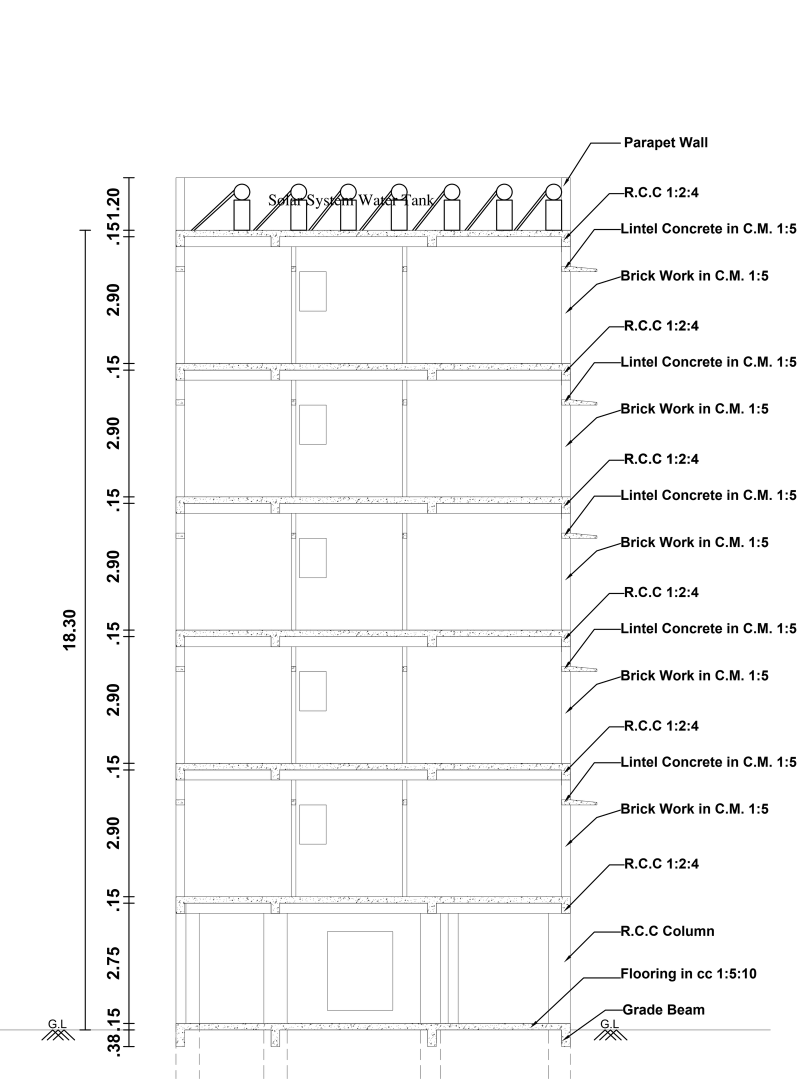

SECTION " CD "

AREA DETAILS:-	Sq.Mt	Sq.Ft
Pro.Stilt Floor Area	220.09	2369
Electrical Transformer Room Area : 28.81 Sq.Mt Parking Area : 191.28 Sq.Mt		
Pro.First Floor Area	220.09	2369
House 1A Building Area Building Area : 93.64 Sq.Mt Balcony Area : 4.65 Sq.Mt Total House 1A Area: 98.29 Sq.Mt		
House 1B Building Area Building Area: 92.18 Sq.Mt Balcony Area : 4.15 Sq.Mt Total House 1B Area : 96.33 Sq.Mt		
Common Area = 25.47 Sq.Mt Total Area = 220.09 Sq.Mt		
Pro.Second Floor Area	220.09	2369
House 2A Building Area Building Area : 93.64 Sq.Mt Balcony Area : 4.65 Sq.Mt Total House 2A Area: 98.29 Sq.Mt		
House 2B Building Area Building Area: 92.18 Sq.Mt Balcony Area : 4.15 Sq.Mt Total House 2B Area : 96.33 Sq.Mt		
Common Area = 25.47 Sq.Mt Total Area = 220.09 Sq.Mt		
Pro.Third Floor Area	220.09	2369
House 3A Building Area Building Area : 93.64 Sq.Mt Balcony Area : 4.65 Sq.Mt Total House 3A Area: 98.29 Sq.Mt		
House 3B Building Area Building Area: 92.18 Sq.Mt Balcony Area : 4.15 Sq.Mt Total House 3B Area : 96.33 Sq.Mt		
Common Area = 25.47 Sq.Mt Total Area = 220.09 Sq.Mt		
Pro.Fourth Floor Area	220.09	2369
House 4A Building Area Building Area : 93.64 Sq.Mt Balcony Area : 4.65 Sq.Mt Total House 4A Area: 98.29 Sq.Mt		
House 4B Building Area Building Area: 92.18 Sq.Mt Balcony Area : 4.15 Sq.Mt Total House 4B Area : 96.33 Sq.Mt		
Common Area = 25.47 Sq.Mt Total Area = 220.09 Sq.Mt		
Pro.Fifth Floor Area	220.09	2369
House 5A Building Area Building Area : 93.64 Sq.Mt Balcony Area : 4.65 Sq.Mt Total House 5A Area: 98.29 Sq.Mt		
House 5B Building Area Building Area: 92.18 Sq.Mt Balcony Area : 4.15 Sq.Mt Total House 5B Area : 96.33 Sq.Mt		
Common Area = 25.47 Sq.Mt Total Area = 220.09 Sq.Mt		
Pro.Head Room Area	28.64	308
Total Pro. St.F, F.F, S.F , T.F, Fo.F Fl.F & H.R Area	1349.18	14523

AREA DETAILS:-	Sq.Mt	Sq.Ft
Site Area (As Per T.S.L.R) (ABCD)	459.00	4941
Pro.Stilt Floor Area	220.09	2369
Pro.First Floor Area	220.09	2369
Pro.Second Floor Area	220.09	2369
Pro.Third Floor Area	220.09	2369
Pro.Fourth Floor Area	220.09	2369
Pro.Fifth Floor Area	220.09	2369
Pro.Head Room Area	28.64	308
Exg Building to Be Removed Area	134.94	1452
Open Area	238.91	2572
Total Pro. St.F, F.F, S.F , T.F, Fo.F Fl.F & H.R Area	1349.18	14523

LEGENDS :-

- Site Boundary
- Exg. Road
- Exg.Building To Be Removed Boundary
- Proposed Building

Area Details :-	As Per Document	As Per T.S Sketch	As On Ground	Least Value
North Side	15.24m (50'-0")	15.20m	15.24m	15.20m
East Side	30.49m (100'-0")	30.40m	30.49m	30.40m
West Side	30.49m (100'-0")	30.40m	30.49m	30.40m
South Side	15.24m (50'-0")	15.00m	15.24m	15.00m
Total Area	464.51 Sq.mt	459.00 Sq.mt	464.51 Sq.mt	459.00 Sq.mt

AREA DETAILS:-

As Per Document = 464.51 Sq.mt
As Per T.S.L.R = 459.00 Sq.mt
Super Imposed Area = 459.04 Sq.mt.
The Least Value Area As Per T.S.L.R

DWELLING DETAILS

FLOOR NAME	Dwelling Reference	Area Details	Dwelling Area
First Floor	1A	Building Area : 93.64 Sq.Mt Balcony Area : 4.65 Sq.Mt Total Area : 98.29 Sq.Mt	98.29
	1B	Building Area: 92.18 Sq.Mt Balcony Area : 4.15 Sq.Mt Total Area : 96.33 Sq.Mt	96.33
Second Floor	2A	Building Area : 93.64 Sq.Mt Balcony Area : 4.65 Sq.Mt Total Area : 98.29 Sq.Mt	98.29
	2B	Building Area: 92.18 Sq.Mt Balcony Area : 4.15 Sq.Mt Total Area : 96.33 Sq.Mt	96.33
Third Floor	3A	Building Area : 93.64 Sq.Mt Balcony Area : 4.65 Sq.Mt Total Area : 98.29 Sq.Mt	98.29
	3B	Building Area: 92.18 Sq.Mt Balcony Area : 4.15 Sq.Mt Total Area : 96.33 Sq.Mt	96.33
Fourth Floor	4A	Building Area : 93.64 Sq.Mt Balcony Area : 4.65 Sq.Mt Total Area : 98.29 Sq.Mt	98.29
	4B	Building Area: 92.18 Sq.Mt Balcony Area : 4.15 Sq.Mt Total Area : 96.33 Sq.Mt	96.33
Fifth Floor	5A	Building Area : 93.64 Sq.Mt Balcony Area : 4.65 Sq.Mt Total Area : 98.29 Sq.Mt	98.29
	5B	Building Area: 92.18 Sq.Mt Balcony Area : 4.15 Sq.Mt Total Area : 96.33 Sq.Mt	96.33

JOINERY DETAILS:-

RS	Rolling Shutter	3.05 x 2.10
MD	Main Door	1.07 x 2.10
D	Door	0.91 x 2.10
D1	Door	0.76 x 2.10
FD	Door	1.22 x 2.10
L.D	Lift Door	0.91 x 2.10
KO	Kitchen Open	0.91 x 2.10
W	Window	1.83 x 1.37
W1	Window	1.22 x 1.37
W2	Window	0.61 x 1.37
KW	Kitchen Window	1.22 x 1.07
SW	Staircase Window	0.61 x 1.37
FW	French Window	0.99 x 1.80
GW	Grill Window	1.50 x 1.80
V	Ventilator	0.60 x 0.90
Ex/F	Exhaust Fan	0.60 Dia

Note:
Rain Water harvesting Details Provided
Drinking water to be provided as per corporation norms
Rain water harvesting tank to be provided
Solid waste tub to be Provided

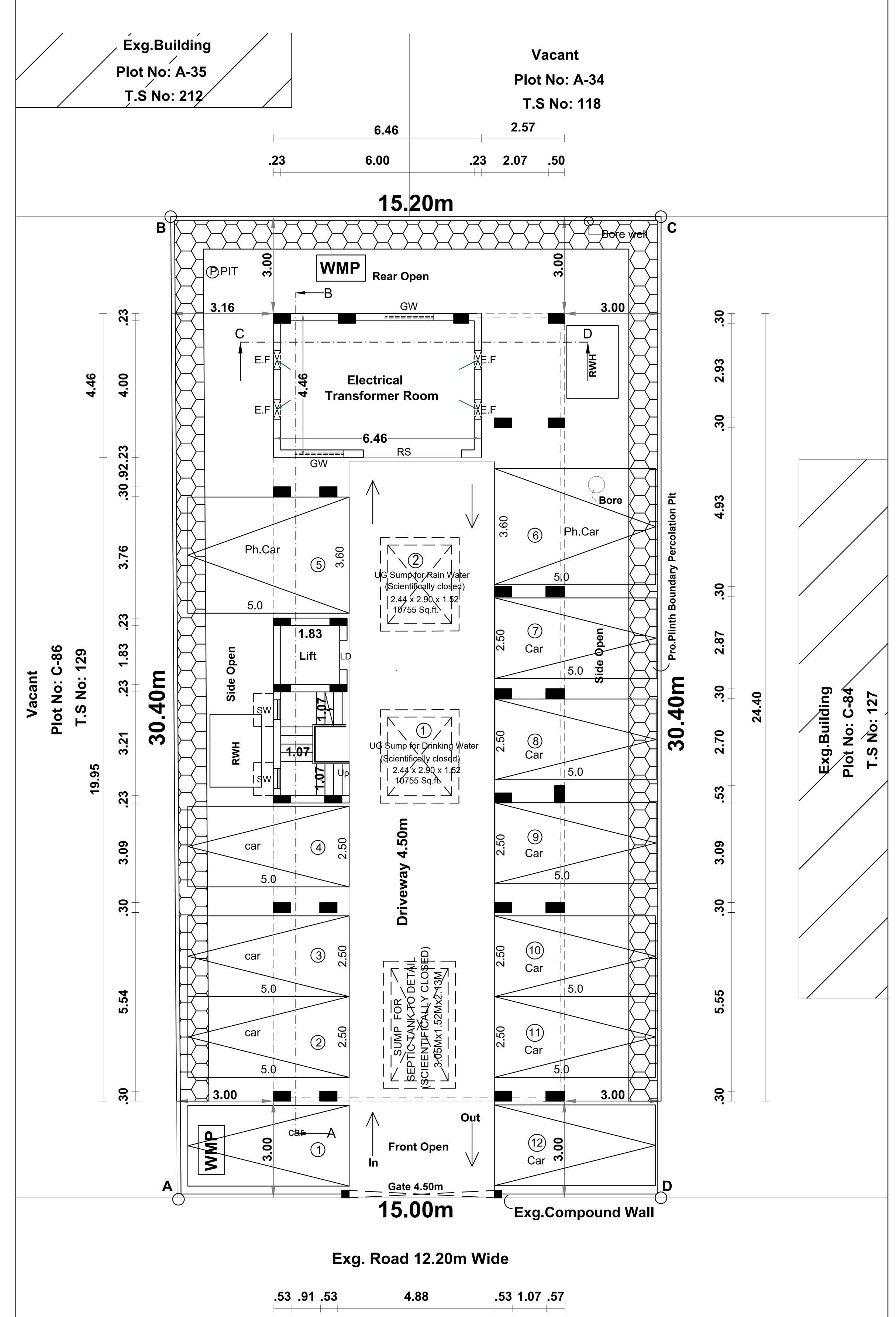

PRO. STILT FLOOR PLAN

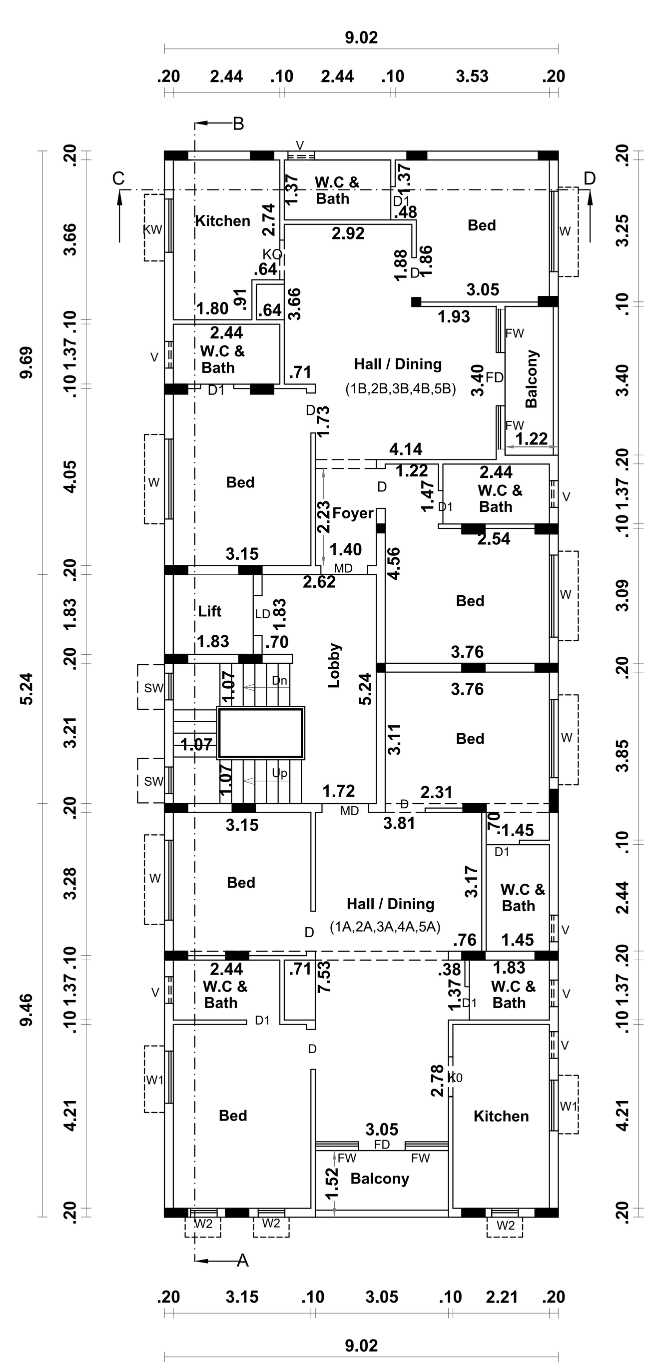

PRO. TYPICAL FIRST , SECOND, THIRD, FOURTH, FIFTH FLOOR PLAN

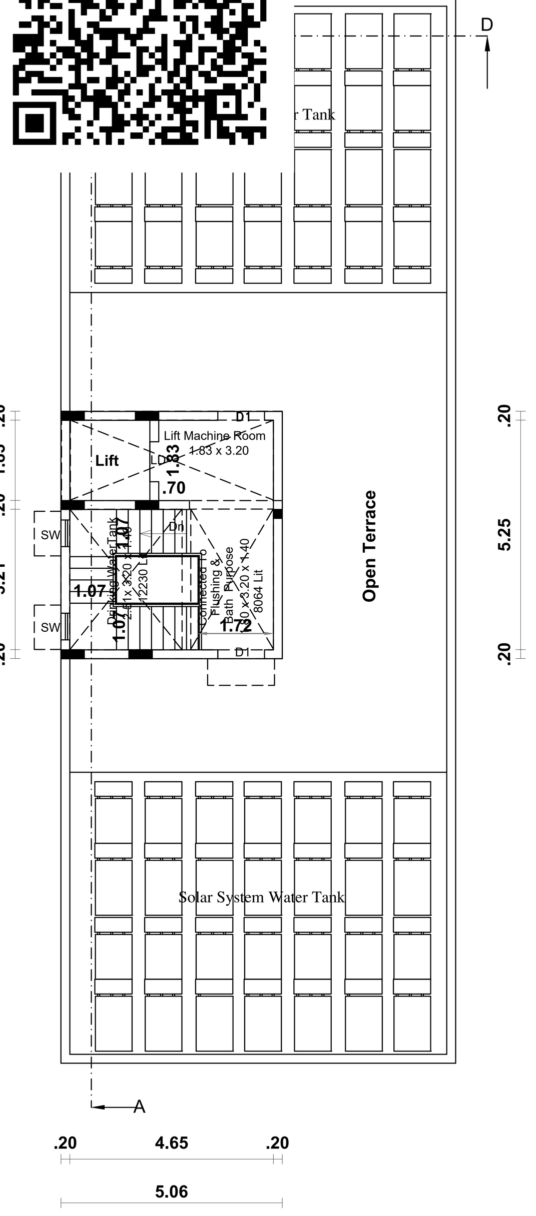

PRO.TERRACE FLOOR PLAN

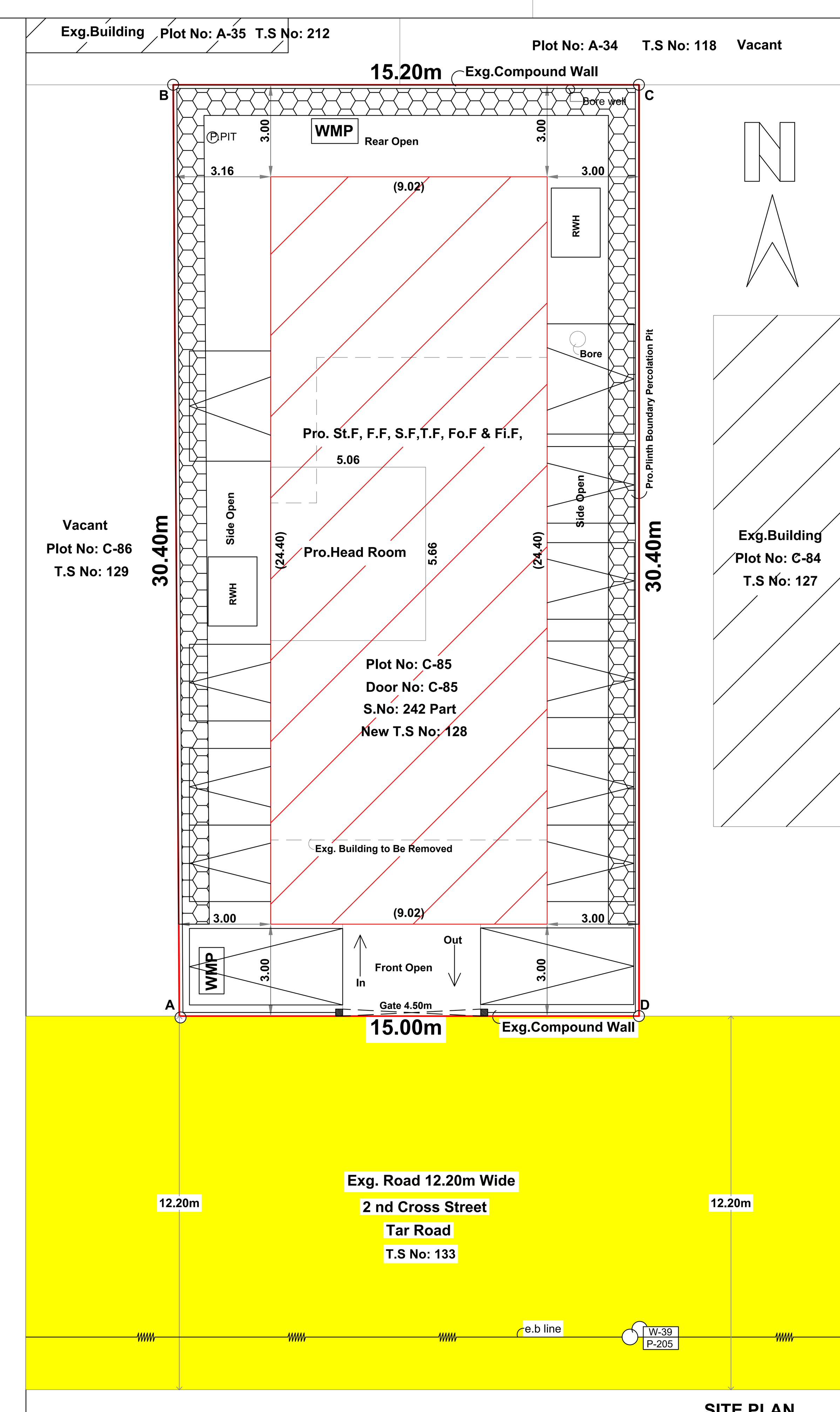

SITE PLAN
SCALE 1: 100

DWELLING UNIT PARKING CALCULATION:-

Dwelling Unit with Floor Area with 75 - 149.99 Sq.m
One Dwelling House = 1 Car Space

Required Parking:

House 1A = (F.F) = 98.29 Sq.Mt = 1 Car
House 1B = (F.F) = 96.33 Sq.Mt = 1 Car
House 2A = (S.F) = 98.29 Sq.Mt = 1 Car
House 2B = (S.F) = 96.33 Sq.Mt = 1 Car
House 3A = (T.F) = 98.29 Sq.Mt = 1 Car
House 3B = (T.F) = 96.33 Sq.Mt = 1 Car
House 4A = (FO.F) = 98.29 Sq.Mt = 1 Car
House 4B = (FO.F) = 96.33 Sq.Mt = 1 Car
House 5A = (FI.F) = 98.29 Sq.Mt = 1 Car
House 5B = (FI.F) = 96.33 Sq.Mt = 1 Car

Required Parking = 10 Car Space
10 % Visitors Parking = 1 Car Space
Total Required Parking = (10 +1) car Space
= 11 Car Space

Available Parking:

= 12 Car Space
(Including 2 Physically Challenged Car Parking)

FLOOR AREA RATIO

Premium FSI Ratio = 2 + 40 % = 2.80

$$= \frac{St.F(Electrical\ Room)+F.F + S.F + T.F + FO.F + FI.F}{Total\ Site\ Area}$$

$$= \frac{28.81+ 220.09 + 220.09 +220.09 + 220.09 + 220.09}{459.00}$$

$$= \frac{1129.26}{459.00}$$

= 2.460 < 2.80

Premium FSI Area = 1129.26 - 918.00 = 211.26

Area Details :-	FSI (Sq.Mt)	Non FSI (Sq.Mt)	Total (Sq.Mt)
Pro. Stilt Floor	28.81	191.28	220.09
Pro.First Floor	220.09	-----	220.09
Pro.Second Floor	220.09	-----	220.09
Pro.Third Floor	220.09	-----	220.09
Pro.Fourth Floor	220.09	-----	220.09
Pro.Fifth Floor	220.09	-----	220.09
Pro.Head Room	-----	28.64	28.64
Total Area	1129.26	219.92	1349.18

Er. R. RAMAN, B.E.(Civil), M.E.(Struct), M.I.E., C.Engg., Registered Structural Engineer Grade-I (SE) DTCP Reg No: CGLRGN/SE/G/2019/07/022, S.S. Manians Apartment, No.5/13, Thambiah Road Extn., West Mambalam, Chennai-600 033.

Structural Engineer

G.V.Venkatraman M.Tech (CE&M) MBA (IE) PGPM, Registered Construction Engineer, Local Planning Authority - Tirunelveli, A-35, 1st cross street, Maharajanagar, Tirunelveli-627011, Phone : 9442610202
RCE 01/TVLD/2022

Contruction Engineer

Applicant

PP/BP/TLPA No: SWP/53/2024

FILE NO: SWP / BPA / 185898 / 2024

Office Use

C. SUBBA RAO B.Arch., A.I.I.A, COA REG. No. CA/82/6834, No.1, Ramakrishna Street, T. Nagar, Chennai - 600 017. DTCP REG. No. GLRGN/RA/Gr-I/2019/12/055

Registered Engineer/Architect

Sheet-1
40 2024
21 03 24

THE LANDLENS SUITE

Eight ways to know a piece of land before you pay for it.

This report covers one part of the picture. These cover the rest, drawn from the same government records, for any property in Tamil Nadu.

LandLens One
Ask anything about a property and get an answer grounded in live government records, with the sources shown.
/landlens/one

Verify My Land
Every record check run on one property and returned as a single report.
/landlens/verify-my-land

Legal Opinion
An advocate's written opinion on the title, built on the records we pull for it.
/landlens

One Map
Every layer on one map: the parcel, its boundary, zoning, water bodies and what sits around it.
/landlens/one/map

PriceMap
What land actually changed hands for around this plot, taken from the registered deeds.
/landlens/pricemap

Build Scope
What you are allowed to build here: floor space, height, coverage and setbacks.
/landlens/build-scope

Property Tracker
Watch a property and hear about it when something new is registered against it.
/landlens/property-tracker

Deal Room
Run the transaction in one place: documents, stamping, signatures and the parties.
/landlens/deal-room

hello@verified.realestate · +91 9996 12 9996

FREE TOOLS · NO ACCOUNT NEEDED

Twenty-four checks you can run yourself, at no cost.

Records and verification

The registers themselves, read for you.

- Encumbrance Certificate
- Patta and Chitta
- Field Measurement Sketch
- EC Analyzer
- Bank charge check
- Court case search
- Seller background check
- Approval check by survey

Value and duty

What it is worth and what it costs to register.

- Guideline value by street
- Guideline value by survey
- Stamp duty and registration fees
- Capital gains
- Floor space index
- Area unit converter

Zoning and land use

What the plan says can happen on this land.

- Land use zone finder
- CMDA land use check
- Coastal regulation zone
- Master plan check
- Water bodies finder
- Airport height clearance

Registers and directories

Who holds it, and which office keeps the record.

- Find your registering office
- Temple property check
- Waqf property check
- RERA register

Every free tool
/tools

Services we run for you
/services

The LandLens suite
/landlens/one

Verified RealEstate™

Every claim in this document traces back to a government record.

- Legal opinions, due diligence and title verification
- Building plan, layout and sub-division approvals
- Completion and occupancy certificates, regularisation
- Escrow, negotiation and NRI property management
- Land survey, soil testing, architecture and construction

Verified RealEstate
3/350/2 Mettukuppam,
OMR Thoraipakkam,
Chennai 600 097, India
hello@verified.realestate
+91 9996 12 9996

Prepared from the registers named on the page each finding sits on. Where a register could not be read, this document says so in its place rather than leaving the gap to be read as a clean result.