Verified RealEstate™

REFERENCE
24/2024-2025

ISSUED
09 November 2024

PP APPROVAL RECORD

Planning Permission

Tirunelveli district, Tamil Nadu

APPROVAL TYPE
Building Plan

ISSUING AUTHORITY
Rural Panchayat

The approval as the planning authority issued it, reproduced in full behind this page.

An approval speaks to what was sanctioned, not to what was built. Completion is a separate record.

Verified RealEstate™
3/350/2 Mettukuppam,
OMR Thoraipakkam,
Chennai 600 097, India

hello@verified.realestate
+91 9996 12 9996
verified.realestate

DIGITALLY VERIFIED RECORD

PLAN SHOWING THE PROPOSED CONSTRUCTION OF COMMERCIAL SHOP IN HOUSE GROUND FLOOR IN PLOT NO:-12 IN S.NO:- 131A/3, IN BANYAN INTERGRATED MARKET BLOCK-A", IN ITTERI VILLAGE IN PALAYAMKOTTAI PANCHAYAT UNION IN PALAYAMKOTTAI TALUK IN TIRUNELVELI DISTRICT.

N

SCALE 1:100

JOINERING		ALL DIMENSTIONS ARE IN FEET			
D1	DOOR	2'6"x7'0"	W	WINDOW	3'0"x4'0"
RS	ROLLING SHUTTER	3'3"x7'0"	W1	WINDOW	4'6"x4'0"
		3'0"x4'0"	V	VENTILATOR	3'0"x2'0"

AREA DETAILS	AS PER THE DOCUMENT.	Sq.Mt	Sq.Ft
EXG ROAD			
SITE AREA S.NO:-131A/3	[CENT-2.52]	16.850	181.372
PRO. G.F PLINTH AREA:		8.295	89.287
TOTAL PRO PLINTH AREA:		8.295	89.287
OPEN AREA:		8.555	92.0314

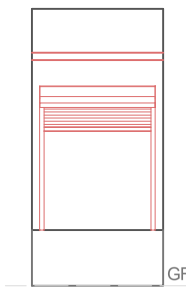

ELEVATION

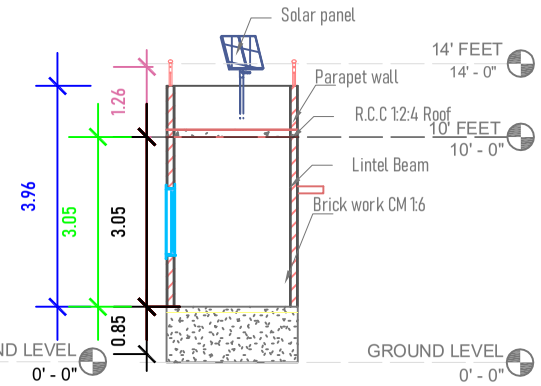

SECTION A-A'

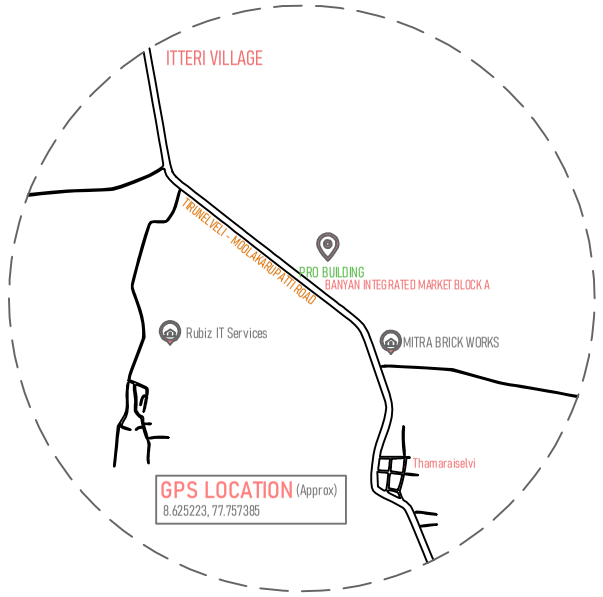

TOPO PLAN

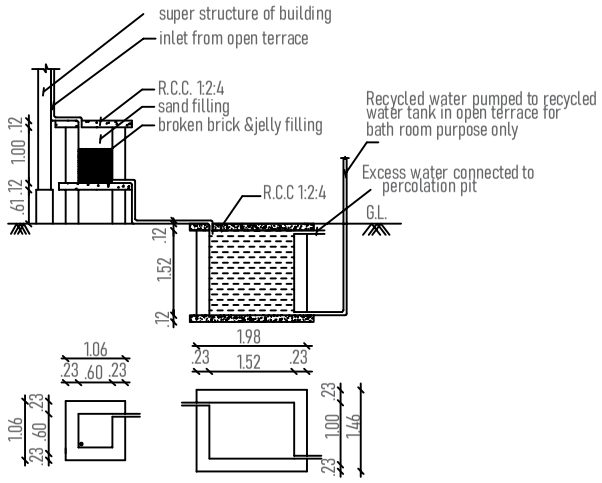

Sump and Filter Bed

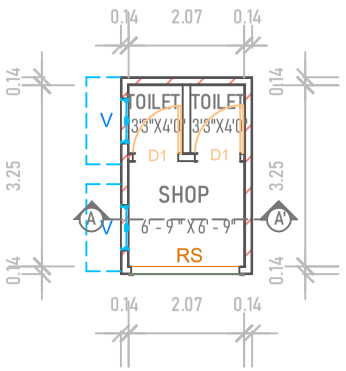

PRO GROUND FLOOR

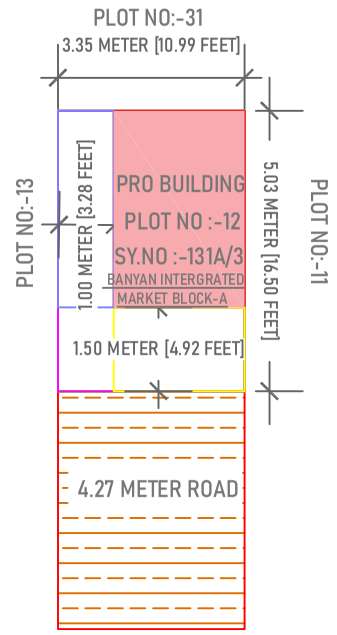

SITE PLAN

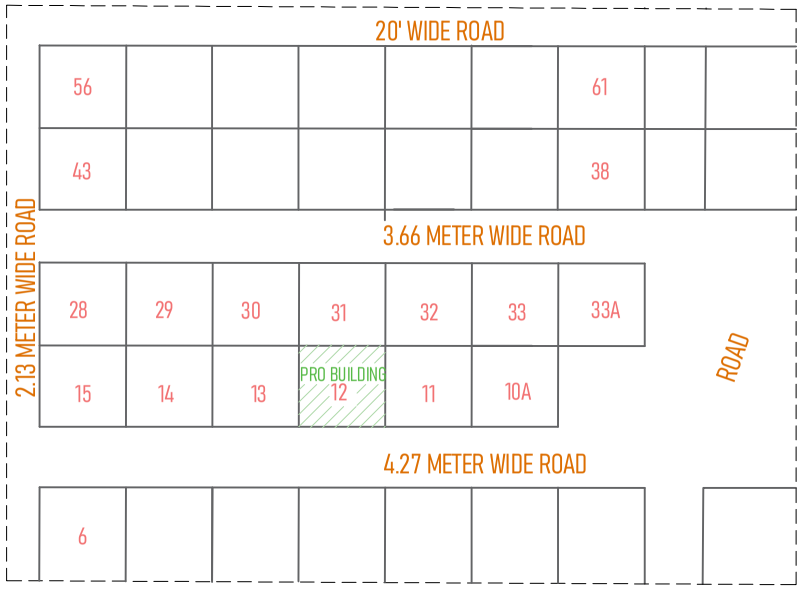

KEY PLAN

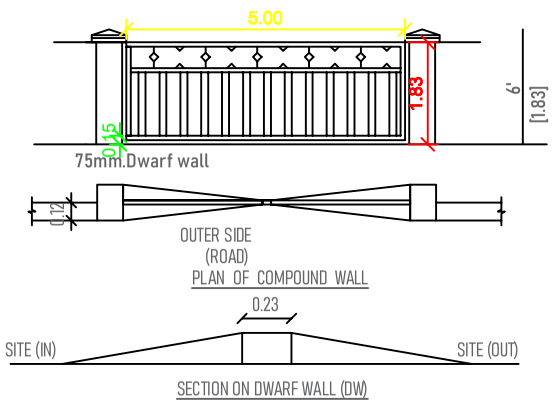

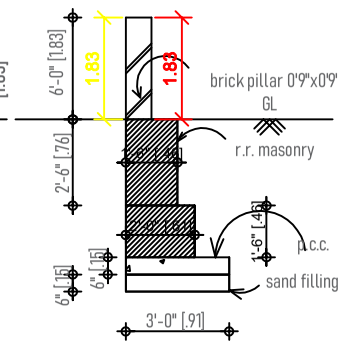

COMPOUND WALL DETAIL

scale: 0"1" = 4'0"

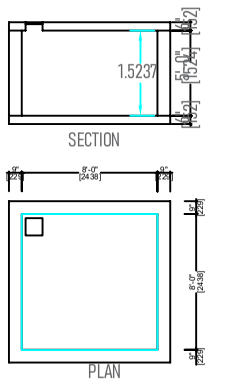

DETAILS OF COLLECTION SUMP FOR RAIN WATER HARVESTING OF ROOF TOP RAIN WATER

RWH_CAPACITY_L=5000LTRS

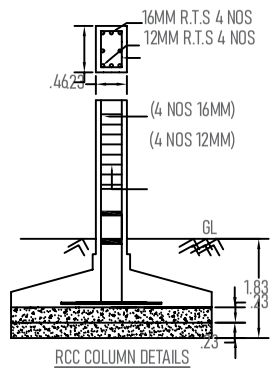

RCC COLUMN DETAILS

NOTE:

- Rain Water harvesting Details Provided (R.W) Waste Water Used for Garden
- Solar System Water tank provided
- Drinking water to be provided
- Rain water harvesting tank to be provided.
- Waste water from recycled water tank & Trench connected to Solid waste tub to be Provided
- U traps provided in septic tank to prevent curb breeding of mosquitoes
- No Children shall be employed
- First aid Box with all equipment shall be provides
- Execution was not done by the below engineer only plans was prepared

APPLICANT'S SIGNATURE

Mr. MARIAPPAN

[Aadhaar No:- 6116 9873 7606]

RS

REGISTERED STRUCTURAL ENGINEER

DRDA TNV/PROF 26/2023

No 3, Sheeba Complex, Perumalpuram, Palayamkottai, Tirunelveli-7.

Cell: 9080579182, 9443507514.

ENGINEER

PLAN ONLY

THE LANDLENS SUITE

Eight ways to know a piece of land before you pay for it.

This report covers one part of the picture. These cover the rest, drawn from the same government records, for any property in Tamil Nadu.

LandLens One
Ask anything about a property and get an answer grounded in live government records, with the sources shown.
/landlens/one

Verify My Land
Every record check run on one property and returned as a single report.
/landlens/verify-my-land

Legal Opinion
An advocate's written opinion on the title, built on the records we pull for it.
/landlens

One Map
Every layer on one map: the parcel, its boundary, zoning, water bodies and what sits around it.
/landlens/one/map

PriceMap
What land actually changed hands for around this plot, taken from the registered deeds.
/landlens/pricemap

Build Scope
What you are allowed to build here: floor space, height, coverage and setbacks.
/landlens/build-scope

Property Tracker
Watch a property and hear about it when something new is registered against it.
/landlens/property-tracker

Deal Room
Run the transaction in one place: documents, stamping, signatures and the parties.
/landlens/deal-room

hello@verified.realestate · +91 9996 12 9996

FREE TOOLS · NO ACCOUNT NEEDED

Twenty-four checks you can run yourself, at no cost.

Records and verification

The registers themselves, read for you.

- Encumbrance Certificate
- Patta and Chitta
- Field Measurement Sketch
- EC Analyzer
- Bank charge check
- Court case search
- Seller background check
- Approval check by survey

Value and duty

What it is worth and what it costs to register.

- Guideline value by street
- Guideline value by survey
- Stamp duty and registration fees
- Capital gains
- Floor space index
- Area unit converter

Zoning and land use

What the plan says can happen on this land.

- Land use zone finder
- CMDA land use check
- Coastal regulation zone
- Master plan check
- Water bodies finder
- Airport height clearance

Registers and directories

Who holds it, and which office keeps the record.

- Find your registering office
- Temple property check
- Waqf property check
- RERA register

Every free tool
/tools

Services we run for you
/services

The LandLens suite
/landlens/one

Verified RealEstate™

Every claim in this document traces back to a government record.

- Legal opinions, due diligence and title verification
- Building plan, layout and sub-division approvals
- Completion and occupancy certificates, regularisation
- Escrow, negotiation and NRI property management
- Land survey, soil testing, architecture and construction

Verified RealEstate
3/350/2 Mettukuppam,
OMR Thoraipakkam,
Chennai 600 097, India
hello@verified.realestate
+91 9996 12 9996

Prepared from the registers named on the page each finding sits on. Where a register could not be read, this document says so in its place rather than leaving the gap to be read as a clean result.