Verified RealEstate™

REFERENCE
94/24-25

ISSUED
27 November 2024

PP APPROVAL RECORD

Planning Permission

Tirunelveli district, Tamil Nadu

APPROVAL TYPE
Building Plan

ISSUING AUTHORITY
Rural Panchayat

The approval as the planning authority issued it, reproduced in full behind this page.

An approval speaks to what was sanctioned, not to what was built. Completion is a separate record.

Verified RealEstate™
3/350/2 Mettukuppam,
OMR Thoraipakkam,
Chennai 600 097, India

hello@verified.realestate
+91 9996 12 9996
verified.realestate

DIGITALLY VERIFIED RECORD

Block No: 1

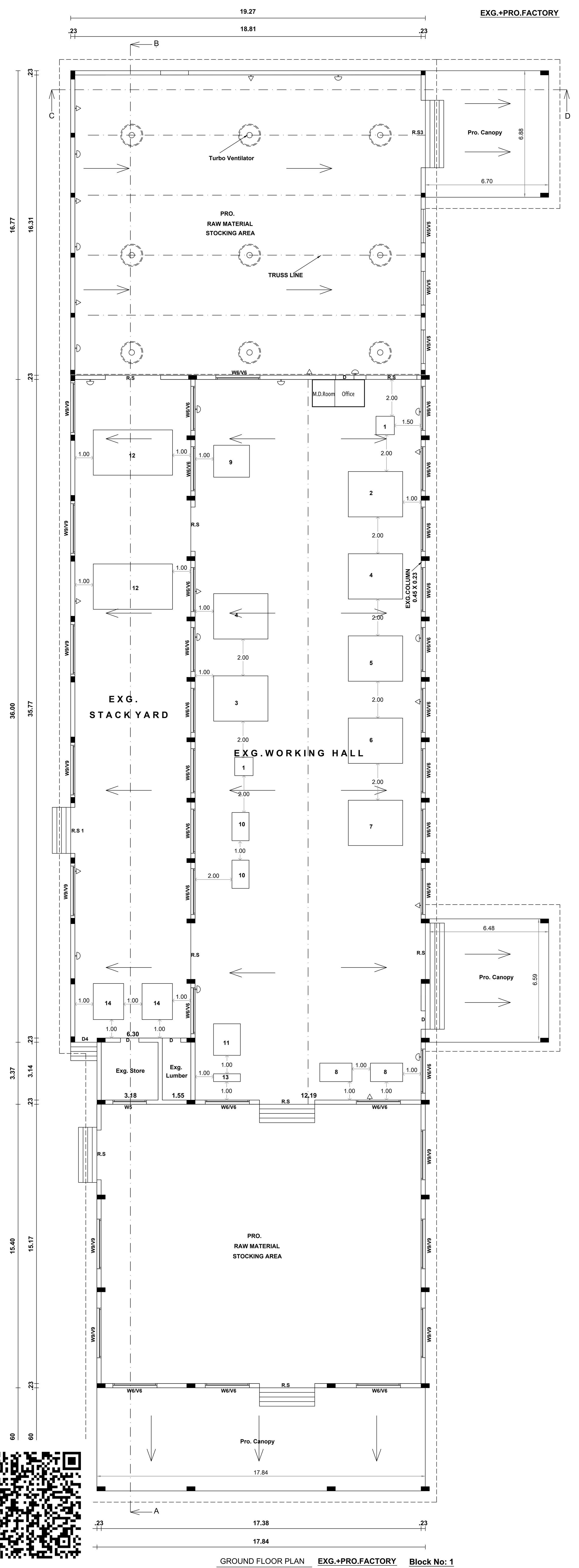

GROUND FLOOR PLAN **EXG.+PRO.FACTORY** **Block No: 1**

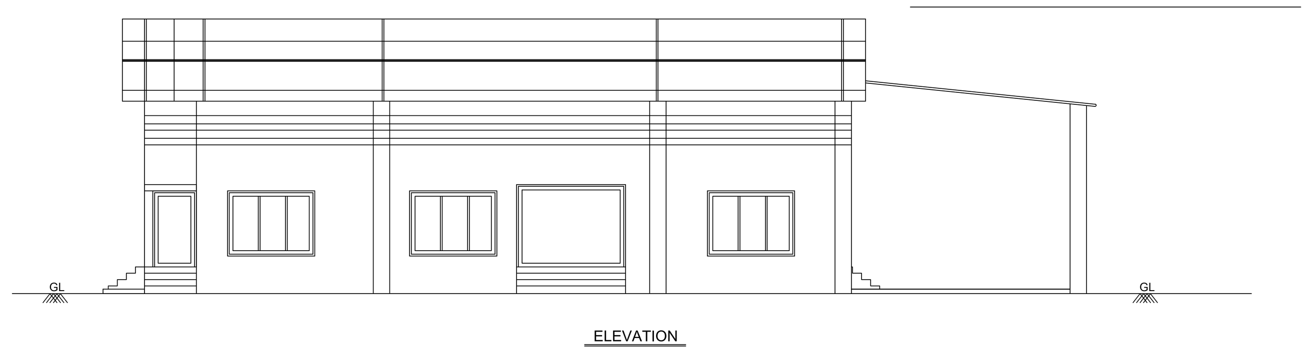

ELEVATION

ELEVATION **Block No: 1**

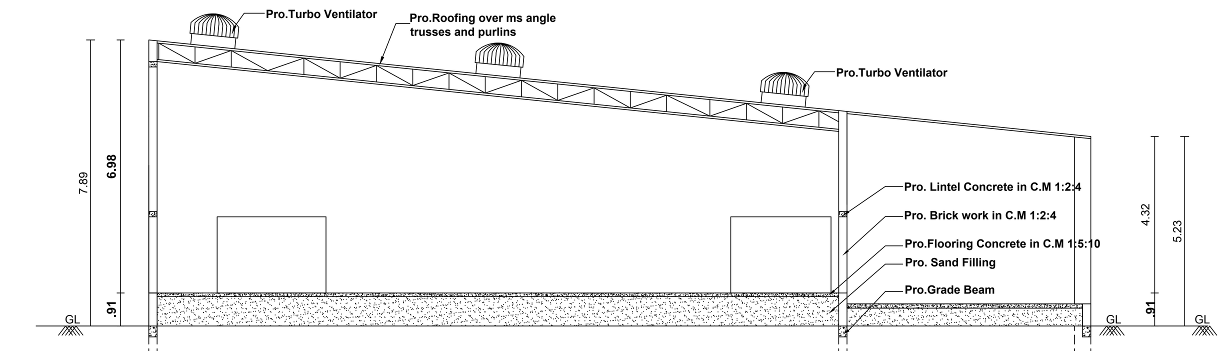

SECTION ON "A-B" **Block No: 1**

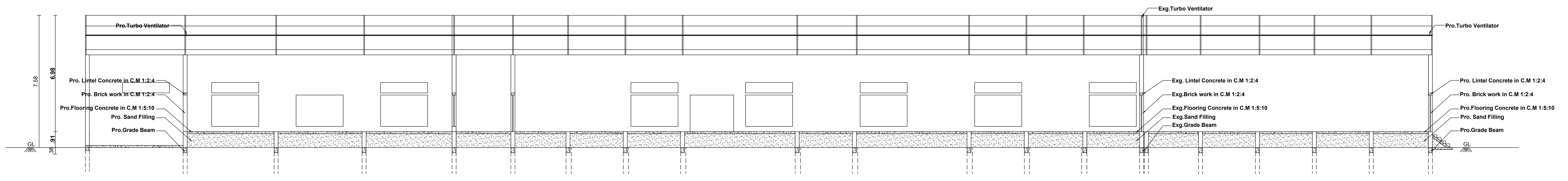

SECTION ON "A-B" **Block No: 1**

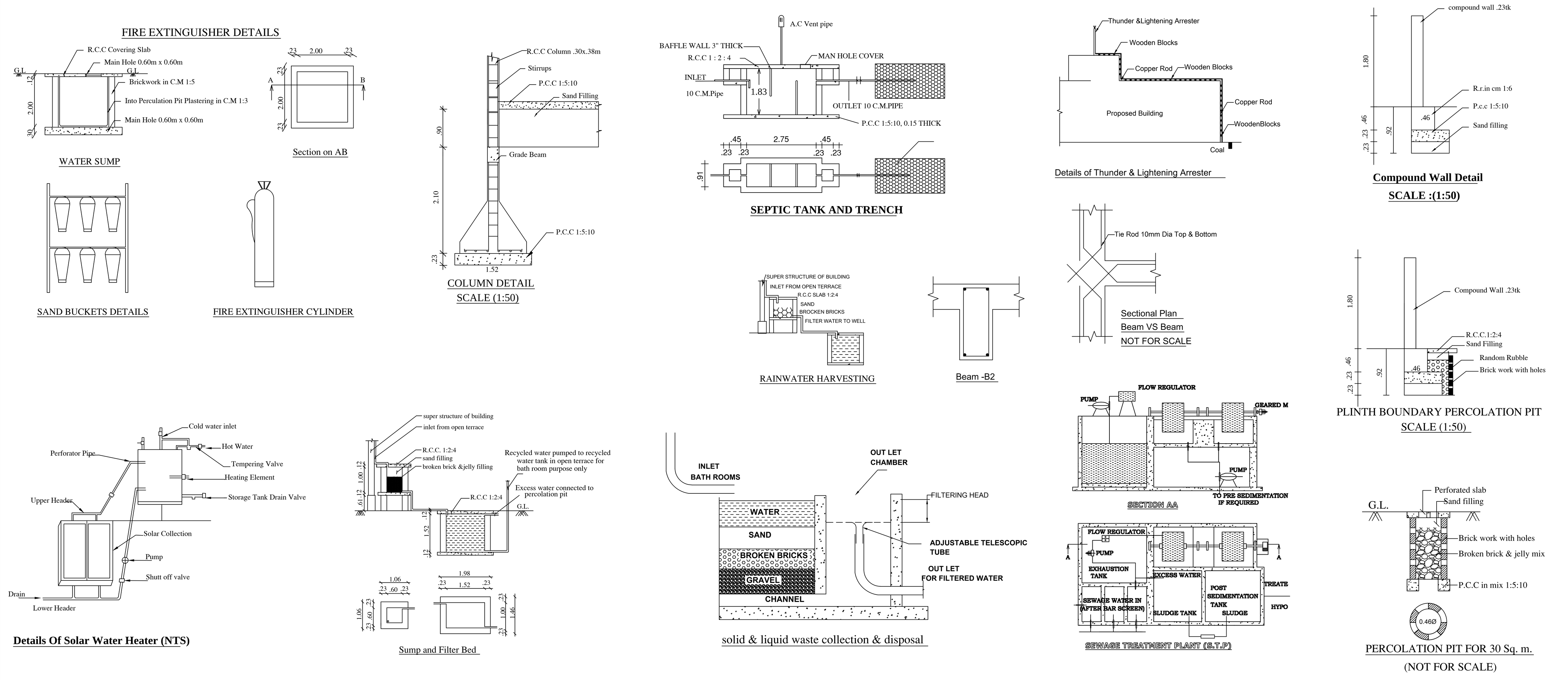

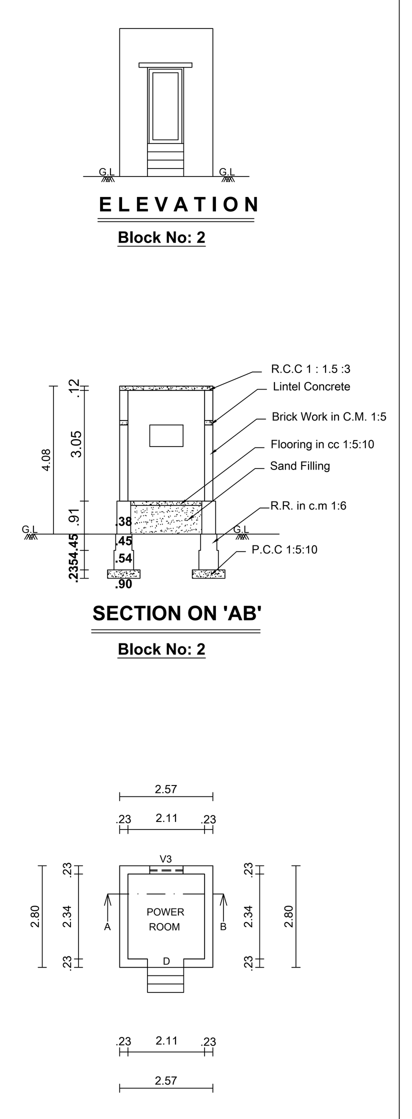

EXG.POWER ROOM **Block No: 2**

ELEVATION Block No: 2

SECTION ON 'AB' Block No: 2

EXG.POWER ROOM GROUND FLOOR PLAN Block No: 2

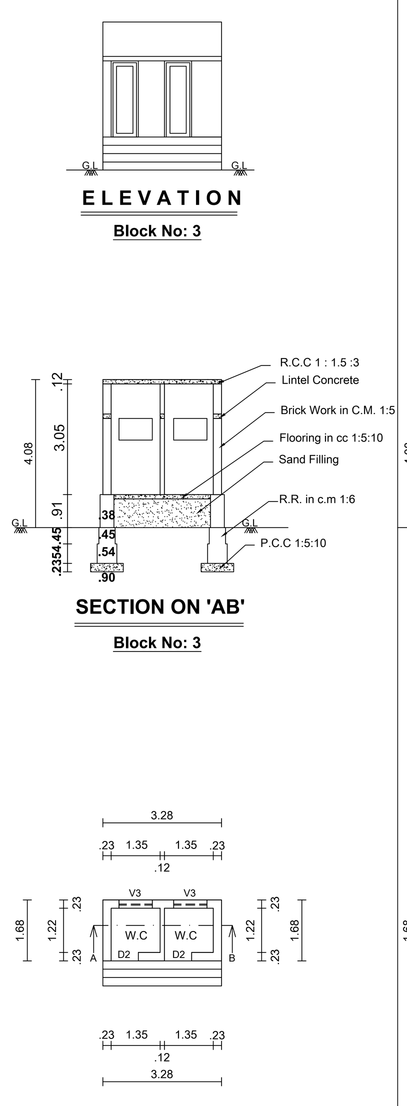

EXG.LADIES TOILET **Block No: 3**

ELEVATION Block No: 3

SECTION ON 'AB' Block No: 3

EXG.LADIES TOILET PLAN GROUND FLOOR PLAN Block No: 3

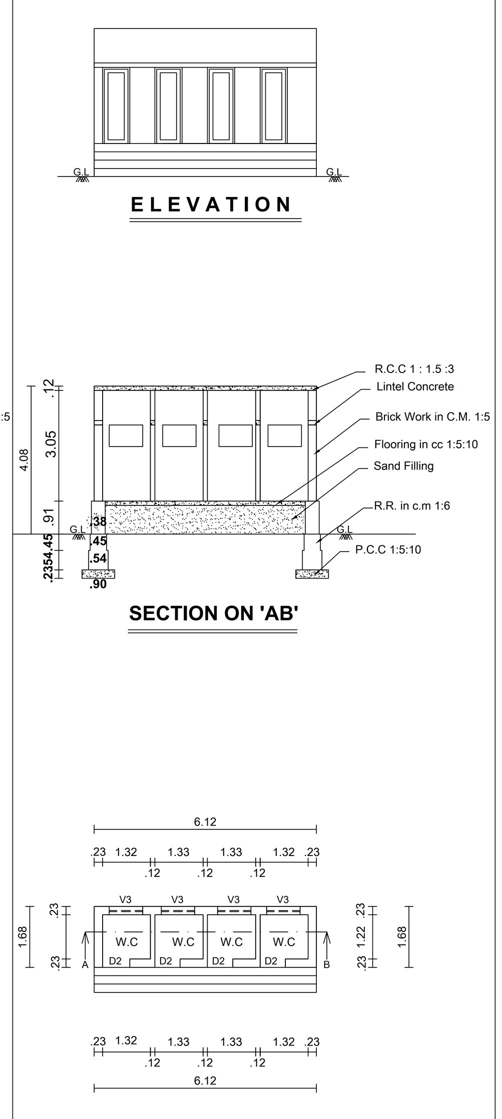

EXG.GENTS TOILET **Block No: 4**

ELEVATION

SECTION ON 'AB'

EXG.GENTS TOILET PLAN GROUND FLOOR PLAN Block No: 4

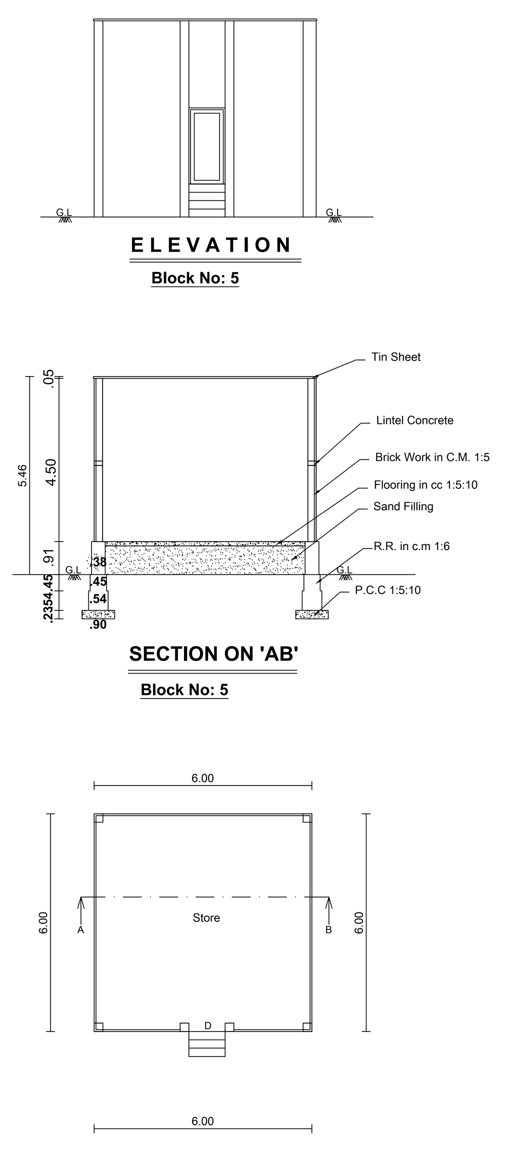

PRO.STORE **Block No: 5**

ELEVATION Block No: 5

SECTION ON 'AB' Block No: 5

PRO.STORE PLAN GROUND FLOOR PLAN Block No: 5

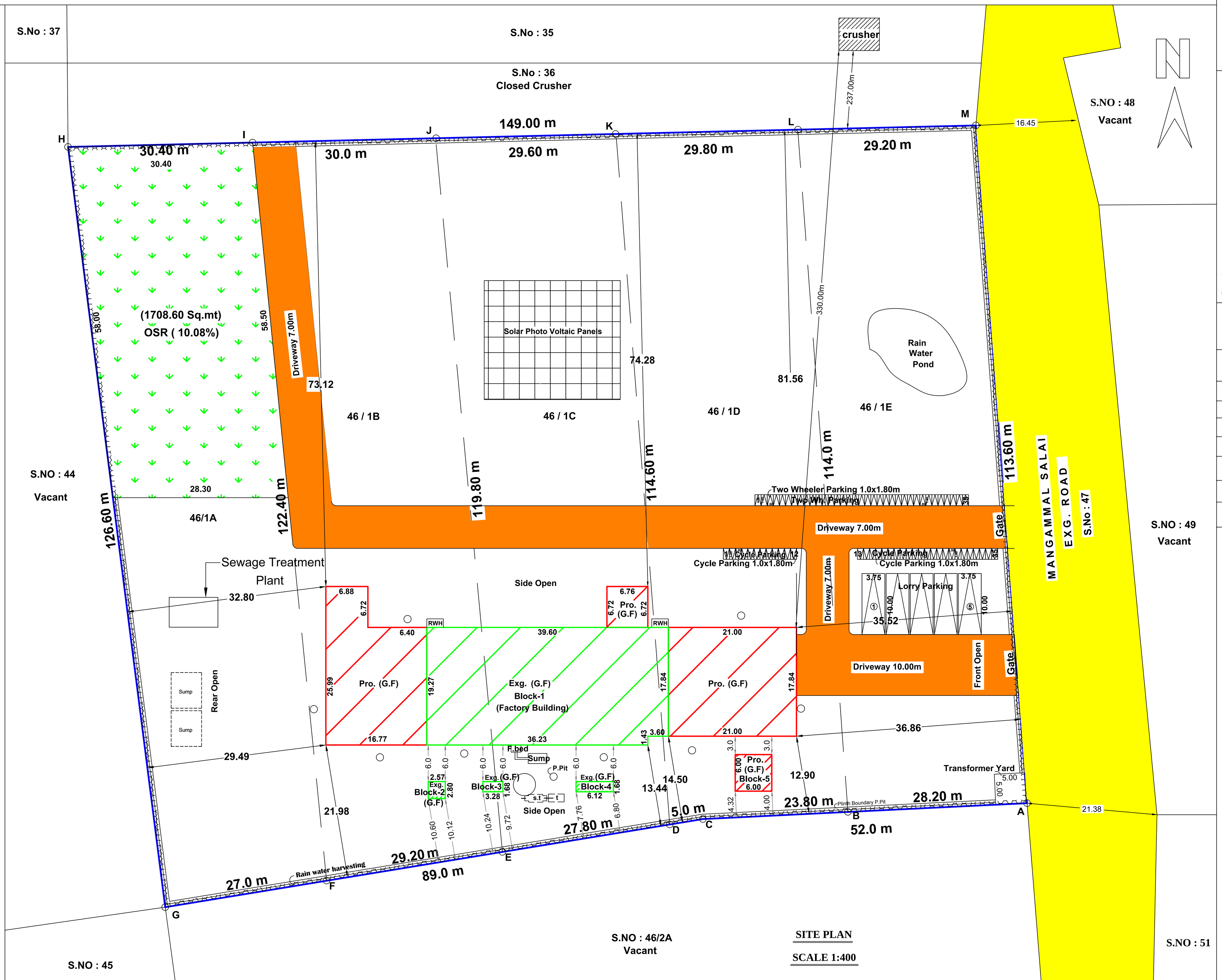

SITE PLAN
SCALE 1:400

PLAN SHOWING THE EXISTING AND ADDITIONAL CONSTRUCTION OF INDUSTRIAL (MANUFACTURING OF CORRUGATED BOX) BUILDING TO THE EXISTING INSTALLATION OF 51.50 HP& PROPOSED INSTALLATION OF 3.50 HP ELECTRIC MOTOR IN S.NO: 46/1A, 46/1B, 46/1C, 46/1D, 46/1E, GANGAIKONDAN VILLAGE-1, GANGAIKONDAN VILLAGE PANCHAYAT, TIRUNELVELI TALUK, TIRUNELVELI DISTRICT.

EXISTING APPROVAL DETAILS:

1) Building Permission No: 29 ஆ/ 2013
(ந.க.எண்:1949/2013 நி.மி.ம, நாள் : 26/12/2013)
2) Gangaikondan Village Panchayat Approval No: 255/2015-2016, Dated : 14-07-2015

GREEN CATEGORY Scale 1:100 All Dimensions are in Metre

EXG.BUILDING APPROVED DETAILS:- M/S. BILDA PACKS

Block	Name	Sq.Mt	Sq.Ft
01	Exg.Factory	758.28	8159
02	Exg. Power Room	7.84	84
03	Exg. Ladies Toilet	5.51	59
04	Exg. Gents Toilet	10.28	111
	Total Approved Area	781.91	8413

PRO.BUILDING DETAILS:- M/S. BILDA PACKS

Block	Name	Sq.Mt	Sq.Ft
01	Pro.Factory	789.88	8502
05	Pro.Store	36.00	388
	Total Proposed Area	825.88	8890
	Total Area (Approved+Proposed)	1607.79	17303

LEGENDS:-

- SITE BOUNDARY (ABCD)
- EXG.BUILDING
- PRO.BUILDING
- EXG.ROAD

Site Area Details (As Per Document & Patta)

S.NO : 46/1A - 3600.0 Sq.mt
S.NO : 46/1B - 3600.0 Sq.mt
S.NO : 46/1C - 3400.0 Sq.mt
S.NO : 46/1D - 3150.0 Sq.mt
S.NO : 46/1E - 3200.0 Sq.mt
16950.0 Sq.mt

AREA DETAILS:- (ABCDEFGHIJKLM)	Sq.Mt	Sq.Ft
SITE AREA (As Per Document)	16950.00	182450
SITE AREA (As Per Patta)	16950.00	182450

PARKING CALCULATIONS GREEN CATEGORY Panchayat Area:

Required Parking : Industrial Area:
Upto than 100 sq.m = Nil
Upto than 500 sq.m = 1 Lorry Space (3.50x10.00)
Above 500 sq.m = 1 Lorry Space for every 500 Sq.m
Required Parking Area = 1607.79 Sq.mt = 1607.79 /50
Required Lorry Space = 4 Nos
Every 50 Sq.m = 1 Two wheeler & 1 Cycle parking
Required Parking = 1607.79 / 50 Sq.m
= 33 Nos Two wheeler & 33 Nos Cycle parking

	Required	Available
Lorry Parking	4 Nos	5 Nos
Two wheeler & Cycle Parking	33 Nos+33 Nos	35 Nos+35 Nos

OSR Area:
Total Extent = 16950.00 Sq.mt (As Per Document)
10% OSR = 1695.00 Sq.mt (10.00 %)
Provided = 1708.60 Sq.mt (10.08 %) (1 to 4)

S.No:	Floor Details	Existing Approved Area in Sq.mt		Proposed Building to be Approved in Sq.mt		Total Area in Sq.mt	
		FSI	Non-FSI	FSI	Non-FSI	FSI	Non-FSI
1	Block-1 (Factory Building)	758.28	-----	789.88	-----	1548.16	-----
2	Block-2 (Power Room)	7.84	-----	-----	-----	7.84	-----
3	Block-3 (Ladies Toilet)	5.51	-----	-----	-----	5.51	-----
4	Block-4 (Gents Toilet)	10.28	-----	-----	-----	10.28	-----
5	Block-5 (Store)	-----	-----	36.00	-----	36.00	-----
	Total	781.91	-----	825.88	-----	1607.79	-----

Floor Space Index

$$= \frac{\text{Exg.G.F + Pro.G.F}}{\text{Site Area}} = \frac{781.91+825.88}{16950.00} = \frac{1607.79}{16950.00} = 0.0949 < 2.00$$

JOINERY DETAILS:-

RS - Rolling shutter	3.05 X 3.05
RS1 - Rolling shutter	2.50 X 3.05
RS3 - Rolling shutter	3.60 X 3.05
D - Door	1.00 X 2.10
D2 - Door	0.75 X 2.10
D4 - Door	1.20 X 2.10
W5 - Window	1.80 X 1.80
W6 - Window	2.40 X 1.80
W9 - Window	2.70 X 1.80
V3 - Ventilator	0.90 X 0.60
V5 - Ventilator	1.80 X 0.60
V6 - Ventilator	2.40 X 0.60
V9 - Ventilator	2.70 X 0.60

EXISTING MACHINERY DETAILS

S.NO	NAME OF MACHINE	NO	POWER H.P/No.	TOTAL H.P
1.	Reel Stand Motor	2	2.00	4.00
2.	Corrugated Machine-1	1	7.50	7.50
3.	Corrugated Machine-2	1	5.00	5.00
4.	Cutting Machine	2	2.00	4.00
5.	Creasing Thin Blade Machine	1	2.00	2.00
6.	Creasing Machine	1	2.00	2.00
7.	Slotting Machine	1	3.00	3.00
8.	Stitching Machine	2	0.50	1.00
9.	Printing Machine	1	3.00	3.00
10.	Pasting Machine	2	1.00	2.00
11.	RS4 Machine	1	3.00	3.00
12.	Punching Machine	2	7.50	15.00
	Existing Horse Power (H.P)			51.50

PROPOSED MACHINERY DETAILS

S.NO	NAME OF MACHINE	NO	POWER H.P/No.	TOTAL H.P
13.	Compressor Motor	1	3.00	3.00
14.	Bursting Strength Machine	2	0.25	0.50
	Proposed Horse Power (H.P)			3.50
	Total Horse Power (H.P)			55.00

Note:
Waste Water Used for Garden
Rain Water harvesting Details Provided
Solar System Water tank provided
Fire Resistance to be provided
Emergency alarm to be provided
Drinking water to be provided as per corporation norms
Rain water harvesting tank to be provided
Waste water from recycled water tank & Trench connected to sullage disposal tank
Solid waste tub to be Provided
Rain water harvesting pit to be Provided
'U' traps provided in septictank to prevent curb breeding of mosquitoes
(As per G.O (M.S) No : 341 - dated 03.11.2004)

SANITATION REQUIREMENTS PROVIDED Total : 19 Labours

Male Labours- 10 nos Female Labours - 9 nos

Sanitary Unit/ Fittings	Required		Available		
	Gn	La	Gn	La	
Water Closet	1	1	1	1	OK
Ablution Taps	1	1	1	1	OK
Urinals	1	1	1	1	OK
Wash Taps	1		1		OK
Drinking Water Fountain	1		1		OK
Bath Shower	1		1		OK
Emergency Shower	1		1		OK

Er. N. Balamurugan DCE
Registered Construction Engineer
Reg. No. RCE / TVLR / 11 / 2019
7/14, Shanmathi Nagar
Gopalasamuthiram Road
Tirunelveli - 627 604

Construction Engineer

Structural Engineer

Power Agent

Applicant

I.P / B.P / TVLD NO: SWP / 126 / 2024

FILE NO: SWP / BPA / 0374026 / 2024

Office Use

P. BALAVENKATESH, B.Arch.
REGISTERED ARCHITECT GRADE I
Regn. No. RA-Gr-I/TVL/March/2019-016
1/6, Periyar Nagar Salai,
North Highground Road, Palayamkottai,
Tirunelveli - 627 002.

Registered Engineer/Architect

Sheet No - 1	
A-27	2024
19 08	2024

THE LANDLENS SUITE

Eight ways to know a piece of land before you pay for it.

This report covers one part of the picture. These cover the rest, drawn from the same government records, for any property in Tamil Nadu.

LandLens One
Ask anything about a property and get an answer grounded in live government records, with the sources shown.
/landlens/one

Verify My Land
Every record check run on one property and returned as a single report.
/landlens/verify-my-land

Legal Opinion
An advocate's written opinion on the title, built on the records we pull for it.
/landlens

One Map
Every layer on one map: the parcel, its boundary, zoning, water bodies and what sits around it.
/landlens/one/map

PriceMap
What land actually changed hands for around this plot, taken from the registered deeds.
/landlens/pricemap

Build Scope
What you are allowed to build here: floor space, height, coverage and setbacks.
/landlens/build-scope

Property Tracker
Watch a property and hear about it when something new is registered against it.
/landlens/property-tracker

Deal Room
Run the transaction in one place: documents, stamping, signatures and the parties.
/landlens/deal-room

hello@verified.realestate · +91 9996 12 9996

FREE TOOLS · NO ACCOUNT NEEDED

Twenty-four checks you can run yourself, at no cost.

Records and verification

The registers themselves, read for you.

- Encumbrance Certificate
- Patta and Chitta
- Field Measurement Sketch
- EC Analyzer
- Bank charge check
- Court case search
- Seller background check
- Approval check by survey

Value and duty

What it is worth and what it costs to register.

- Guideline value by street
- Guideline value by survey
- Stamp duty and registration fees
- Capital gains
- Floor space index
- Area unit converter

Zoning and land use

What the plan says can happen on this land.

- Land use zone finder
- CMDA land use check
- Coastal regulation zone
- Master plan check
- Water bodies finder
- Airport height clearance

Registers and directories

Who holds it, and which office keeps the record.

- Find your registering office
- Temple property check
- Waqf property check
- RERA register

Every free tool
/tools

Services we run for you
/services

The LandLens suite
/landlens/one

Verified RealEstate™

Every claim in this document traces back to a government record.

- Legal opinions, due diligence and title verification
- Building plan, layout and sub-division approvals
- Completion and occupancy certificates, regularisation
- Escrow, negotiation and NRI property management
- Land survey, soil testing, architecture and construction

Verified RealEstate
3/350/2 Mettukuppam,
OMR Thoraipakkam,
Chennai 600 097, India
hello@verified.realestate
+91 9996 12 9996

Prepared from the registers named on the page each finding sits on. Where a register could not be read, this document says so in its place rather than leaving the gap to be read as a clean result.