Verified RealEstate™

REFERENCE
26/25-26

ISSUED
22 May 2025

PP APPROVAL RECORD

Planning Permission

Tirunelveli district, Tamil Nadu

APPROVAL TYPE
Building Plan

ISSUING AUTHORITY
Rural Panchayat

The approval as the planning authority issued it, reproduced in full behind this page.

An approval speaks to what was sanctioned, not to what was built. Completion is a separate record.

Verified RealEstate™
3/350/2 Mettukuppam,
OMR Thoraipakkam,
Chennai 600 097, India

hello@verified.realestate
+91 9996 12 9996
verified.realestate

DIGITALLY VERIFIED RECORD

Block No: 1

EXG.+PRO.FACTORY

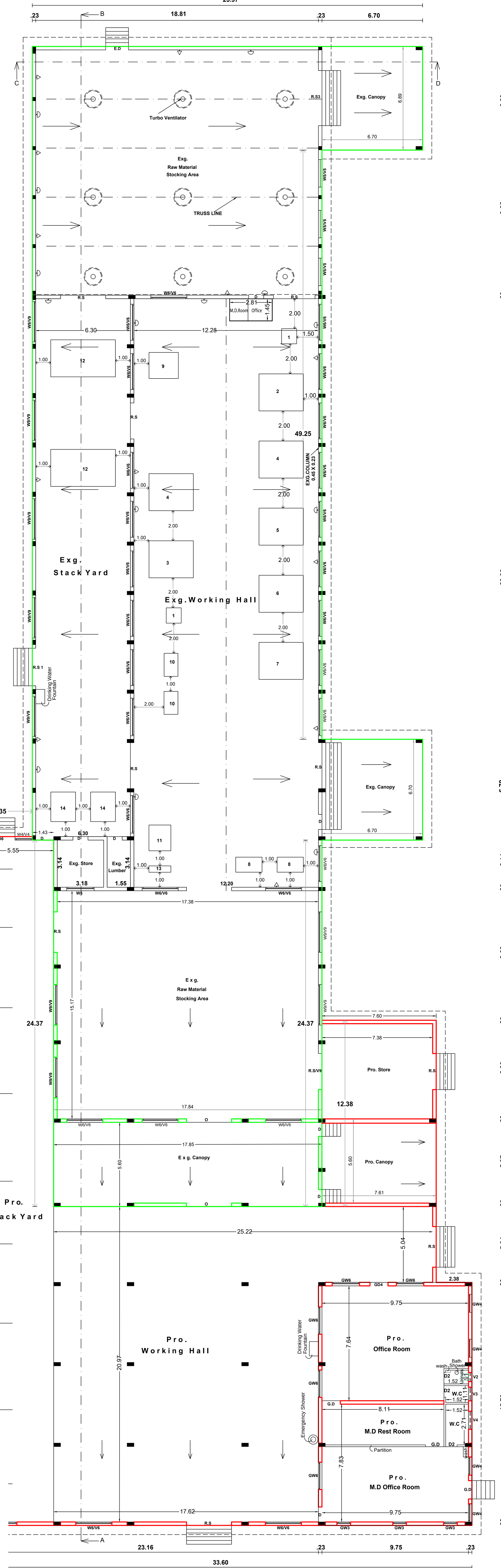

GROUND FLOOR PLAN EXG.+PRO.FACTORY Block No: 1 Scale 1:120

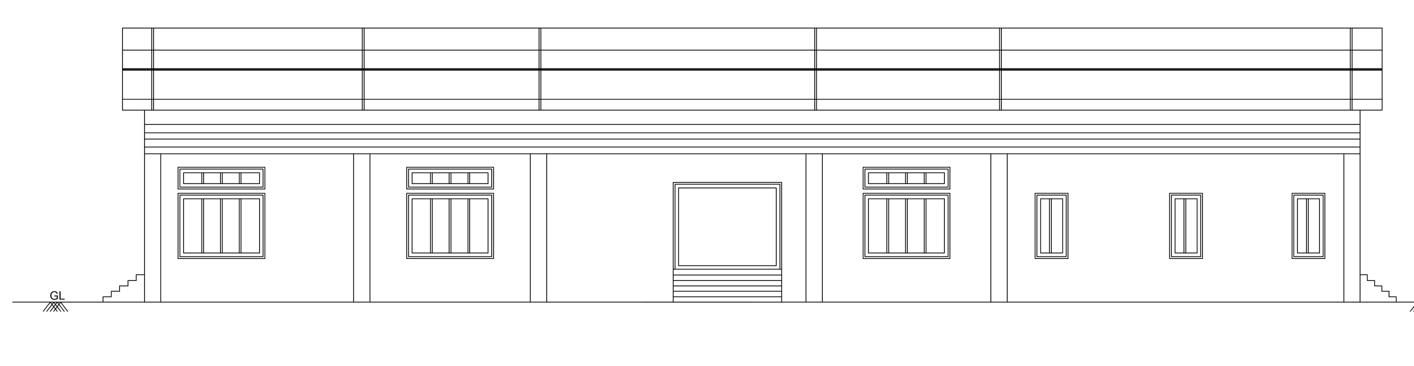

ELEVATION Block No: 1

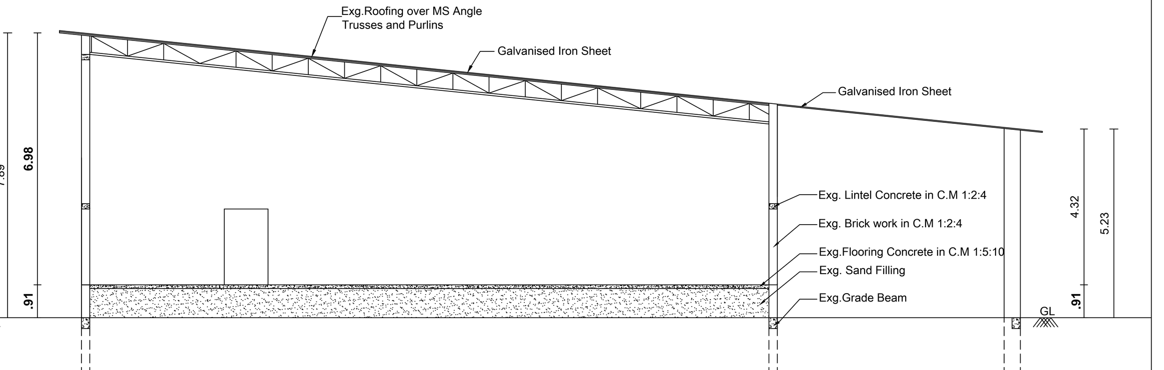

SECTION ON "C-D" Block No: 1

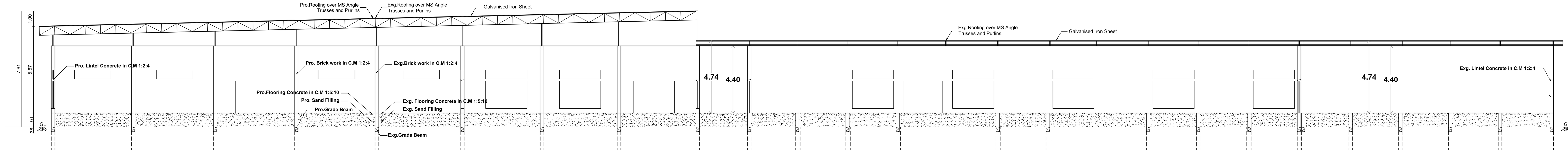

SECTION ON "A-B" Block No: 1

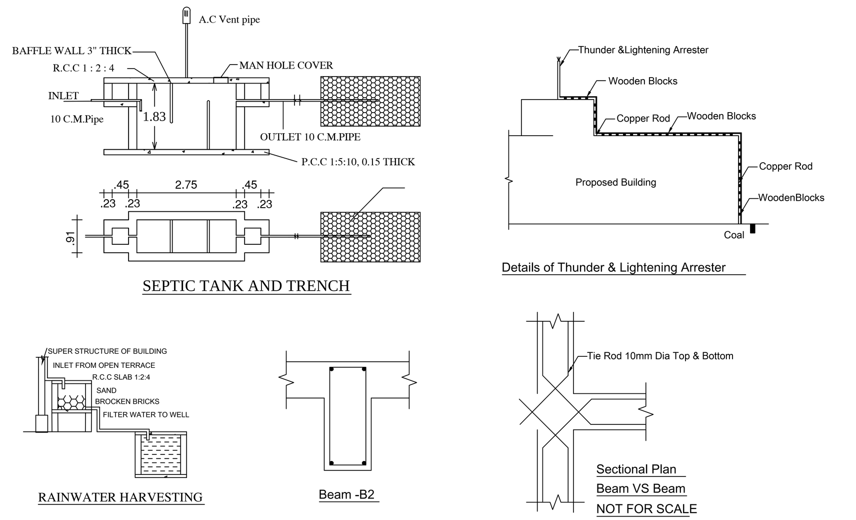

SEPTIC TANK AND TRENCH

RAINWATER HARVESTING

Beam -B2

Details of Thunder & Lightening Arrester

Sectional Plan Beam VS Beam NOT FOR SCALE

EXG.POWER ROOM Block No: 2

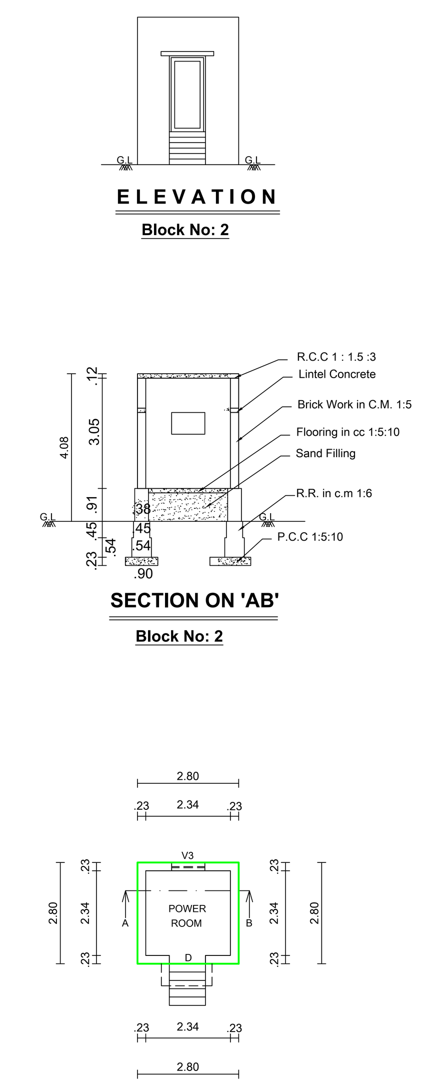

ELEVATION Block No: 2

SECTION ON 'AB' Block No: 2

EXG.POWER ROOM GROUND FLOOR PLAN Block No: 2

EXG.LADIES TOILET Block No: 3

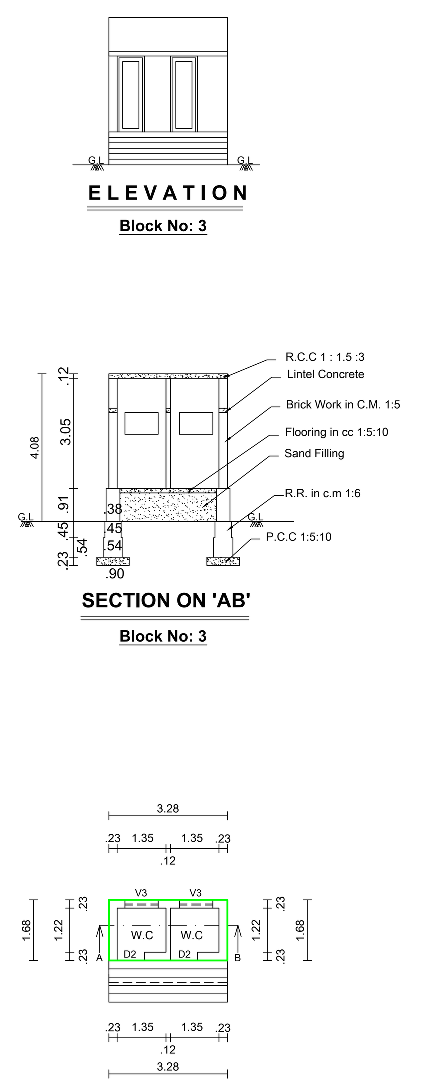

ELEVATION Block No: 3

SECTION ON 'AB' Block No: 3

EXG.LADIES TOILET PLAN GROUND FLOOR PLAN Block No: 3

EXG.GENTS TOILET Block No: 4

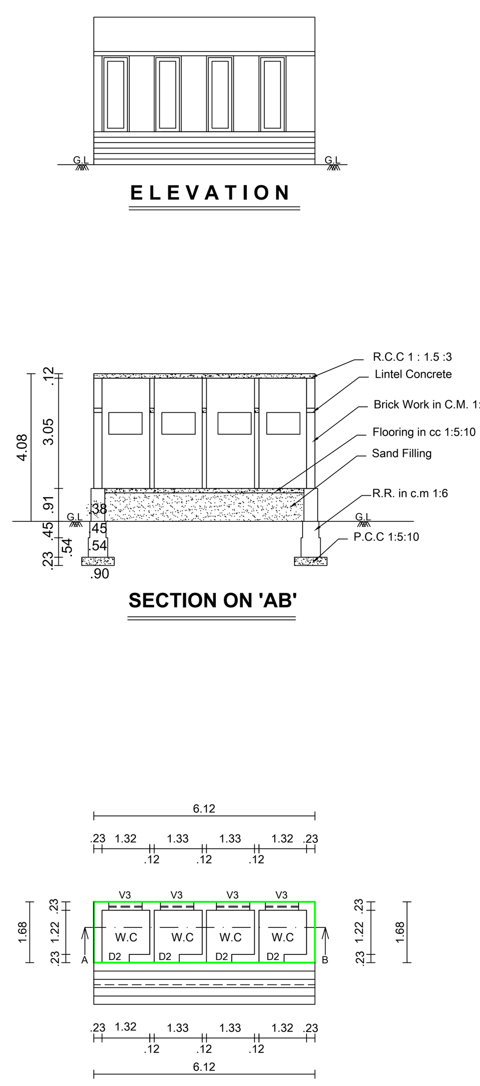

ELEVATION

SECTION ON 'AB'

EXG.GENTS TOILET PLAN GROUND FLOOR PLAN Block No: 4

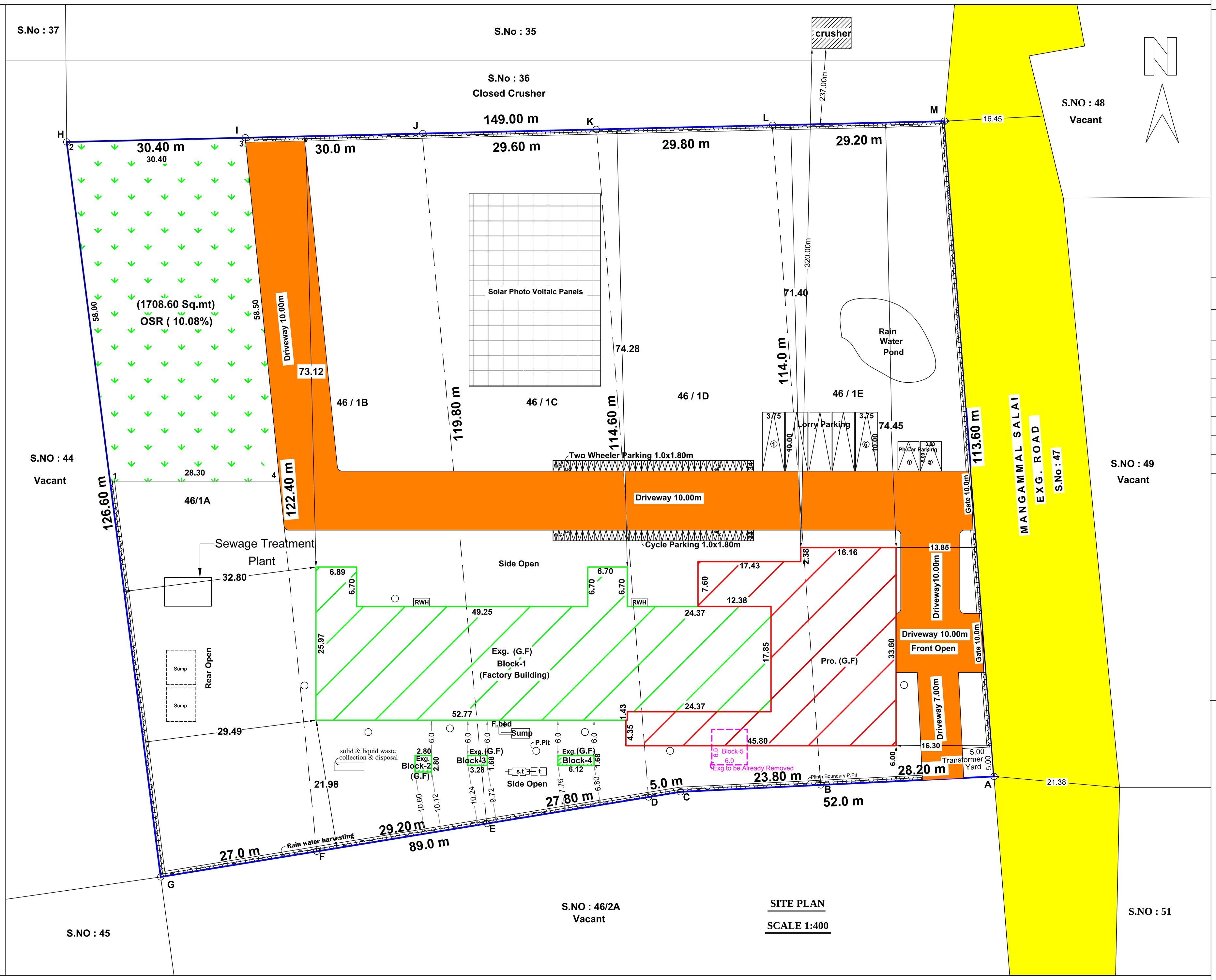

SITE PLAN SCALE 1:400

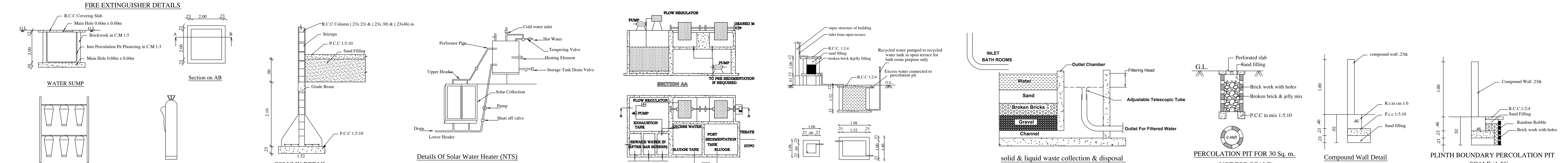

FIRE EXTINGUISHER DETAILS — WATER SUMP — Section on AB — SAND BUCKETS DETAILS — FIRE EXTINGUISHER CYLINDER — COLUMN DETAIL SCALE (1:50) — Details Of Solar Water Heater (NTS) — SECTION AA — SEWAGE TREATMENT PLANT (S.T.P) — Sump and Filter Bed — solid & liquid waste collection & disposal — PERCOLATION PIT FOR 30 Sq. m. (NOT FOR SCALE) — Compound Wall Detail SCALE :(1:50) — PLINTH BOUNDARY PERCOLATION PIT SCALE (1:50)

REVISED PLAN SHOWING THE EXISTING AND ADDITIONAL CONSTRUCTION OF INDUSTRIAL (MANUFACTURING OF CORRUGATED BOX) BUILDING TO THE EXISTING INSTALLATION OF 55.00 HP ELECTRIC MOTOR IN S.NO:46/1A, 46/1B, 46/1C, 46/1D, 46/1E, GANGAIKONDAN VILLAGE-1, GANGAIKONDAN VILLAGE PANCHAYAT, TIRUNELVELI TALUK, TIRUNELVELI DISTRICT.

GREEN CATEGORY   Scale 1:100 All Dimensions are in Metre

EXG.BUILDING APPROVED DETAILS:- M/S. BILDA PACKS

Block	Name	Sq.Mt	Sq.Ft
01	Exg.Factory	1548.16	16664
02	Exg. Power Room	7.84	84
03	Exg. Ladies Toilet	5.51	59
04	Exg. Gents Toilet	10.28	111
05	Exg. Store	36.00	388
	Total Approved Area	1607.79	17306

PRO.BUILDING DETAILS:- M/S. BILDA PACKS

Block	Name	Sq.Mt	Sq.Ft
01	Pro. Factory &	766.02	8245
	Pro. Office Room	165.00	1776
	Total Proposed Area	931.02	10021

EXG.TO BE REMOVED.BUILDING DETAILS:- M/S. BILDA PACKS

Block	Name	Sq.Mt	Sq.Ft
05	Exg. Store	36.00	388
	Total Exg.to be Already Removed Area	36.00	388
Total Area	(Approved + Proposed - Already Removed) (1607.79 + 931.02 - 36.00)	2502.81	26939

Block No:	Block Name	Existing Approval Area in Sq.mt FSI	Non-FSI	Proposed Building to be Approved in Sq.mt FSI	Non-FSI	Total Area in Sq.mt FSI	Non-FSI
1	Factory &	1548.16	-----	766.02	-----	2314.18	-----
	Office Room	-----	-----	165.00	-----	165.00	-----
2	Power Room	7.84	-----	-----	-----	7.84	-----
3	Ladies Toilet	5.51	-----	-----	-----	5.51	-----
4	Gents Toilet	10.28	-----	-----	-----	10.28	-----
5	Store	36.00	-----	-36.00 Already Removed)	-----	-----	-----
	Total	1607.79	-----	895.02	-----	2502.81	-----

Floor Space Index

= (Exg.G.F + Pro.G.F) / Site Area = (1607.79 + 895.02) / 16950.00

= 2502.81 / 16950.00 = 0.148 < 2.00

PARKING CALCULATIONS   GREEN CATEGORY   Panchayat Area:

Required Parking : Industrial Area:

Upto than 100 sq.m = Nil
Upto than 750 sq.m = 1 Lorry Space (3.50x10.00)
Above 750 sq.m = 1 Lorry Space for every 750 Sq.m
Required Parking Area = 2337.81 Sq.mt = 2337.81 / 750
Required Lorry Space = 4 Nos

Every 150 Sq.m = 1 Car Parking
Required Parking = 165.00 / 150 Sq.m
= 2 Car Parking

Every 75 Sq.m = 1 Two wheeler & 1 Cycle parking
Required Parking = 2337.81 / 75 Sq.m
= 32 Nos Two wheeler & 32 Nos Cycle parking

	Required	Available
Lorry Parking	4 Nos	5 Nos
Car Parking	2 Nos	2 Nos (Including 2 Nos Ph.Challenged)
Two wheeler & Cycle Parking	32 Nos+ 32 Nos	34 Nos + 34 Nos

SANITATION REQUIREMENTS PROVIDED   Total : 19 Labours

Male Labours- 10 nos   Female Labours - 9 nos

Sanitary Unit / Fittings	Required Gn	Required La	Available Gn	Available La	
Water Closet	1	1	4	4	OK
Ablution Taps	1	1	4	4	OK
Urinals	1	0	4	0	OK
Wash Taps	1		2		OK
Drinking Water Fountain	1		2		OK
Bath Shower	1		1		OK
Emergency Shower	1		1		OK

Note:
- Waste Water Used for Garden
- Rain Water harvesting Details Provided
- Solar System Water tank provided
- Fire Resistance to be provided
- Emergency alarm to be provided
- Drinking water to be provided as per corporation norms
- Rain water harvesting tank to be provided
- Waste water from recycled water tank & Trench connected to sullage disposal tank
- Solid waste tub to be Provided
- Rain water harvesting pit to be Provided
- 'U' traps provided in septictank to prevent curb breeding of mosquitoes
(As per G.O (M.S) No : 341 - dated 03.11.2004)

LEGENDS:-
- SITE BOUNDARY (ABCDEFGHIJKLM)
- EXG.BUILDING
- PRO.BUILDING
- EXG.ROAD

Site Area Details (As Per Document & Patta)

S.NO : 46/1A	- 3600.0 Sq.mt
S.NO : 46/1B	- 3600.0 Sq.mt
S.NO : 46/1C	- 3400.0 Sq.mt
S.NO : 46/1D	- 3150.0 Sq.mt
S.NO : 46/1E	- 3200.0 Sq.mt
	16950.0 Sq.mt

AREA DETAILS:- (ABCDEFGHIJKLM)	Sq.Mt	Sq.Ft
SITE AREA (As Per Document)	16950.00	182450
SITE AREA (As Per Patta)	16950.00	182450

OLD APPROVAL PLAN

I.P / B.P / TVLD NO: SWP / 126 / 2024

FILE NO: SWP / BPA / 0374026 / 2024

OSR Area:

Total Extent = 16950.00 Sq.mt (As Per Document)
10% OSR = 1695.00 Sq.mt (10.00 %)
Provided = 1708.60 Sq.mt (10.08 %) (1 to 4)

JOINERY DETAILS:-

RS	Rolling shutter	3.05 X 3.05
RS1	Rolling shutter	2.50 X 3.05
RS3	Rolling shutter	3.60 X 3.05
E.D	Emergency Door	1.50 X 2.10
D	Door	1.00 X 2.10
D2	Door	0.75 X 2.10
D6	Door	1.83 X 2.10
G.D	Glass Door	1.20 X 2.10
GD4	Glass Door	0.96 X 2.10
O	Open	3.00 X 2.10
GW3	Glass Window	0.90 X 1.80
GW4	Glass Window	1.20 X 1.80
GW6	Glass Window	1.80 X 1.80
W3	Window	0.90 X 1.80
W4	Window	1.20 X 1.80
W5	Window	1.80 X 1.80
W6	Window	2.40 X 1.80
W9	Window	2.70 X 1.80
V2	Ventilator	0.60 X 0.60
V3	Ventilator	0.90 X 0.60
V4	Ventilator	1.20 X 0.60
V5	Ventilator	1.80 X 0.60
V6	Ventilator	2.40 X 0.60
V9	Ventilator	2.70 X 0.60

MACHINERY DETAILS

S.NO	NAME OF MACHINE	NO	POWER H.P/No.	TOTAL H.P
1.	Reel Stand Motor	2	2.00	4.00
2.	Corrugated Machine-1	1	7.50	7.50
3.	Corrugated Machine-2	1	5.00	5.00
4.	Cutting Machine	2	2.00	4.00
5.	Creasing Thin Blade Machine	1	2.00	2.00
6.	Creasing Machine	1	2.00	2.00
7.	Slotting Machine	1	3.00	3.00
8.	Stitching Machine	2	0.50	1.00
9.	Printing Machine	1	3.00	3.00
10.	Pasting Machine	2	1.00	2.00
11.	RS4 Machine	1	3.00	3.00
12.	Punching Machine	2	7.50	15.00
13.	Compressor Motor	1	3.00	3.00
14.	Bursting Strength Machine	2	0.25	0.50
	Total Horse Power (H.P)			55.00

Er. N. Balamurugan DCE
Registered Construction Engineer
Reg. No. RCE / TVLR / 11 / 2019
7/14, Shanmathi Nagar
Gopalasamuthiram Road
Tirunelveli - 627 604
Cell: 8122155332, 8220145598

Construction Engineer

P. BALA SUBRAMANIAN, M.E.,(Structure)
REGISTERED STRUCTURAL ENGINEER GRADE-II
Regn. No. RSE-Gr.II 02/TVLD/2021
1/6, Periyar Nagar Salai, North Highground Road,
Palayamkottai, Tirunelveli-627002.
Cell: 99949 54448

Structural Engineer

R. Shantha
Power Agent

Applicant

I.P / B.P / TVLD NO: SWP / 46 / 2025

FILE NO: SWP / BPA / 471809 / 2025

Office Use

P. BALAVENKATESH, B.Arch.
REGISTERED ARCHITECT GRADE I
Regn. No. RA-Gr-I/TVL/March/2019-010
1/6, Periyar Nagar Salai,
North Highground Road, Palayamkottai,
Tirunelveli - 627 002.

Registered Engineer/Architect

Sheet No - 1		
	29	2025
18	02	2025

THE LANDLENS SUITE

Eight ways to know a piece of land before you pay for it.

This report covers one part of the picture. These cover the rest, drawn from the same government records, for any property in Tamil Nadu.

LandLens One
Ask anything about a property and get an answer grounded in live government records, with the sources shown.
/landlens/one

Verify My Land
Every record check run on one property and returned as a single report.
/landlens/verify-my-land

Legal Opinion
An advocate's written opinion on the title, built on the records we pull for it.
/landlens

One Map
Every layer on one map: the parcel, its boundary, zoning, water bodies and what sits around it.
/landlens/one/map

PriceMap
What land actually changed hands for around this plot, taken from the registered deeds.
/landlens/pricemap

Build Scope
What you are allowed to build here: floor space, height, coverage and setbacks.
/landlens/build-scope

Property Tracker
Watch a property and hear about it when something new is registered against it.
/landlens/property-tracker

Deal Room
Run the transaction in one place: documents, stamping, signatures and the parties.
/landlens/deal-room

hello@verified.realestate · +91 9996 12 9996

FREE TOOLS · NO ACCOUNT NEEDED

Twenty-four checks you can run yourself, at no cost.

Records and verification

The registers themselves, read for you.

- Encumbrance Certificate
- Patta and Chitta
- Field Measurement Sketch
- EC Analyzer
- Bank charge check
- Court case search
- Seller background check
- Approval check by survey

Value and duty

What it is worth and what it costs to register.

- Guideline value by street
- Guideline value by survey
- Stamp duty and registration fees
- Capital gains
- Floor space index
- Area unit converter

Zoning and land use

What the plan says can happen on this land.

- Land use zone finder
- CMDA land use check
- Coastal regulation zone
- Master plan check
- Water bodies finder
- Airport height clearance

Registers and directories

Who holds it, and which office keeps the record.

- Find your registering office
- Temple property check
- Waqf property check
- RERA register

Every free tool
/tools

Services we run for you
/services

The LandLens suite
/landlens/one

Verified RealEstate™

Every claim in this document traces back to a government record.

- Legal opinions, due diligence and title verification
- Building plan, layout and sub-division approvals
- Completion and occupancy certificates, regularisation
- Escrow, negotiation and NRI property management
- Land survey, soil testing, architecture and construction

Verified RealEstate
3/350/2 Mettukuppam,
OMR Thoraipakkam,
Chennai 600 097, India
hello@verified.realestate
+91 9996 12 9996

Prepared from the registers named on the page each finding sits on. Where a register could not be read, this document says so in its place rather than leaving the gap to be read as a clean result.