Verified RealEstate™

REFERENCE
275/2026

ISSUED
12 August 2026

PP APPROVAL RECORD

Planning Permission

Tirunelveli district, Tamil Nadu

APPROVAL TYPE
Building Plan

ISSUING AUTHORITY
Town Panchayat

The approval as the planning authority issued it, reproduced in full behind this page.

An approval speaks to what was sanctioned, not to what was built. Completion is a separate record.

Verified RealEstate™
3/350/2 Mettukuppam,
OMR Thoraipakkam,
Chennai 600 097, India

hello@verified.realestate
+91 9996 12 9996
verified.realestate

DIGITALLY VERIFIED RECORD

PLAN SHOWING THE PROPOSED ADDITIONAL CONSTRUCTION INDUSTRIAL BUILDING (MCC ROOM FOR HAG/SLAG SILO BUILDING) FOR M/s THE INDIA CEMENTS LIMITED IN S.NO: 384/1B, 385A/1, 386A/1, 407A/1A, 408B/1A, 409B/1A, 410B/1A, 410B/1B1, 411A/1A,411A/1B1A, 412B/1A1, 413/1, 414, 415, 416, 417, 418, 419, 420, 421, 422, 423, 424, 837/1A2B, 837/1B2 AT SANKAR NAGAR OF NARANAMMALPURAM PART-1 VILLAGE, SANKAR NAGAR SPECIAL GRADE TOWN PANCHAYAT, TIRUNELVELI TALUK, TIRUNELVELI DISTRICT.

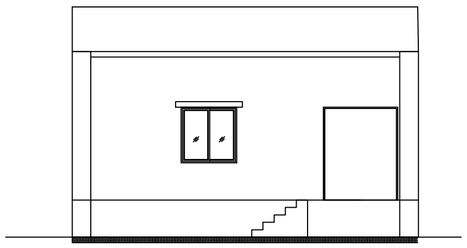

ELEVATION

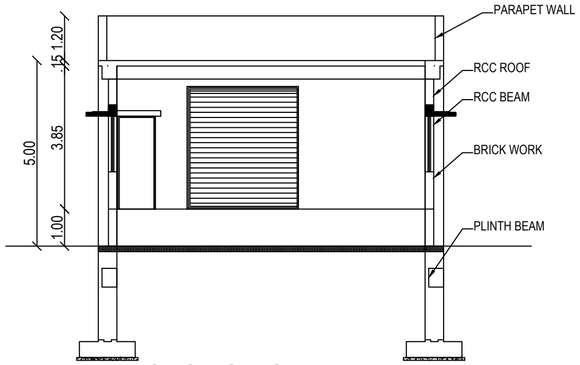

SECTION ON AA

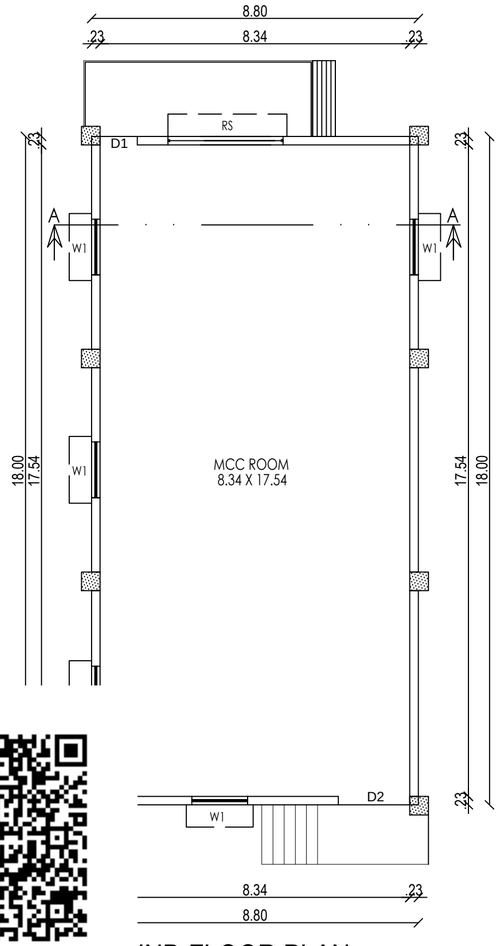

JND FLOOR PLAN

AREA DETAILS			SQ.M
SITE AREA (121Acre 68Cents)			4,92,600.40
BUILDING AREA	FSI AREA IN Sq.m	NON FSI AREA IN Sq.m	TOTAL AREA IN Sq.m
BLOCK-111 MCC ROOM FOR HAG/SLAG SILO BUILDING GROUND FLOOR	158.40		158.40

SCHEDULE OF JOINERIES

D1	DOOR	1.00m X 2.10m
D2	DOOR	2.00m X 2.10m
RS	ROLLING SHUTTER	3.00m X 3.00m
W1	WINDOW	1.50m X 1.50m

Er. N. BALAMURUGAN, DCE., B.E.,
Registered Construction Engineer
Reg. No. RCE / TVLR / 11 / 2019
12/6A, South Car Street, Town Plaza,
(Near by Santhi Vinayagar Kovil)
Tirunelveli Town - 627 006.
Cell No: 81221 55332
Email ID: balamurugann18@gmail.com

CONSTRUCTION ENGINEER

Er. G. Muralidharan,
B.E., A.M.I.E., PGDQSV., F.I.V., M.Sc.(Valuation)
Registered Structural Engineer (NBH)
Reg. No: RSE/Gr II / TVL / March / 2019 / 021
SWATHI CONSTRUCTIONS
No: 1-B/2, High Ground Road,
PALAYAMKOTTAI - 627 002.
Ph: 94433 - 62000, 0462 - 2560598

REG.STRUCTURAL ENGINEER

For THE INDIA CEMENTS LIMITED..
AUTHORISED SIGNATORY

APPLICANT

Er. G. Muralidharan,
B.E., A.M.I.E., PGDQSV., F.I.V., M.Sc.(Valuation)
Registered Engineer Grade - I (RE)
Reg. No: RE/Gr I / TVL / March / 2019 / 008
SWATHI CONSTRUCTIONS
No: 1-B/2, High Ground Road,
PALAYAMKOTTAI - 627 002.
Ph: 94433 - 62000, 0462 - 2560598

REG.ARCHITECT/ ENGINEER

PROPOSED MCC ROOM FOR HAG/SLAG SILO BUILDING
BLOCK-111

PLAN SHOWING THE PROPOSED ADDITIONAL CONSTRUCTION INDUSTRIAL BUILDING (HAG BUILDING UNIT) FOR M/s THE INDIA CEMENTS LIMITED IN S.NO: 384/1B, 385A/1, 386A/1, 407A/1A, 408B/1A, 409B/1A, 410B/1A, 410B/1B1, 411A/1A, 411A/1B1A, 412B/1A1, 413/1, 414, 415, 416, 417, 418, 419, 420, 421, 422, 423, 424, 837/1A2B, 837/1B2 AT SANKAR NAGAR OF NARANAMMALPURAM VILLAGE PART-1 VILLAGE AND SANKAR NAGAR SPECIAL GRADE TOWN PANCHAYAT, TIRUNELVELI TALUK, TIRUNELVELI DISTRICT.

AREA DETAILS				SQ.M
SITE AREA (121Acre 68Cents)				4,92,600.40
BUILDING AREA	Building LVL	FSI AREA IN Sq.m	NON FSI AREA IN Sq.m	TOTAL AREA IN Sq.m
BLOCK-112 HAG BUILDING UNIT GROUND FLOOR	+0.00m LVL	158.92	---	158.92
FIRST FLOOR	+6.80m LVL	158.92	---	158.92
SECOND FLOOR	+13.10m LVL	99.55	---	99.55
THIRD FLOOR	+17.85m LVL	99.55	---	99.55
FOURTH FLOOR	+26.70m LVL	99.55	---	99.55
TOTAL FLOOR		616.49	---	616.49

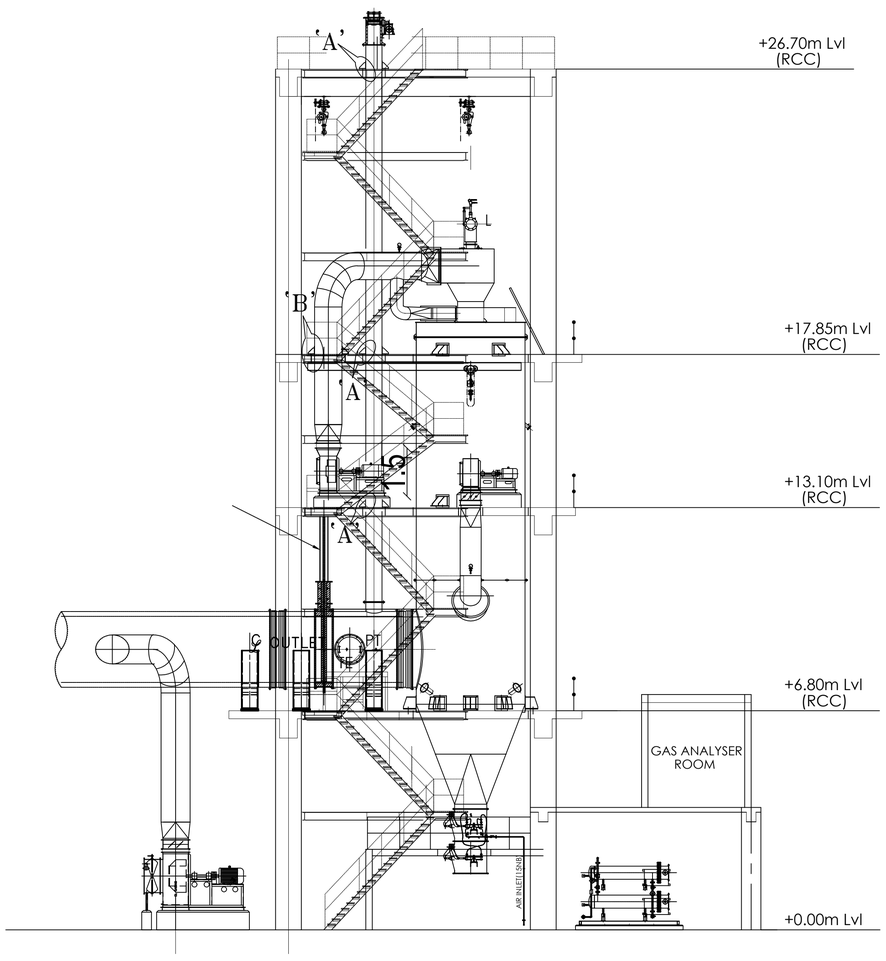

ELEVATION

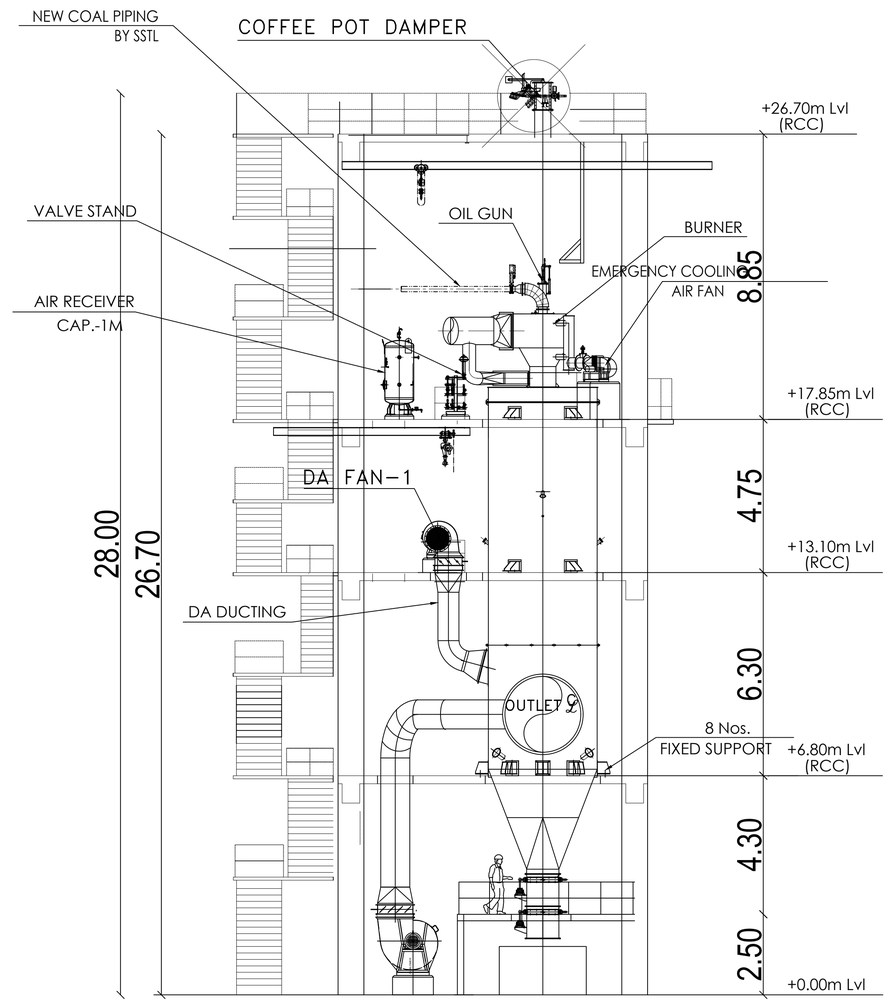

SECTION BB

Er. N. BALAMURUGAN, DCE., B.E.,
Registered Construction Engineer
Reg. No. RCE / TVLR / 11 / 2019
12/6A, South Car Street, Town Plaza,
(Near by Santhi Vinayagar Kovil)
Tirunelveli Town - 627 006.
Cell No: 81221 55332
Email ID: balamurugan18@gmail.com

CONSTRUCTION ENGINEER

Er. G. Muralidharan,
B.E., A.M.I.E., PGDQSV., F.I.V.,M.Sc.(Valuation)
Registered Structural Engineer (NSE)
Reg. No: RSE/Gr II / TVL / March / 2019 / 021
SWATHI CONSTRUCTIONS
No: 1-B/2, High Ground Road,
PALAYAMKOTTAI - 627 002.
Ph: 94433 - 62000, 0462 - 2560598

REG.STRUCTURAL ENGINEER

For THE INDIA CEMENTS LIMITED..
AUTHORISED SIGNATORY

APPLICANT

Er. G. Muralidharan,
B.E., A.M.I.E., PGDQSV., F.I.V.,M.Sc.(Valuation)
Registered Engineer Grade - I (RE)
Reg. No: RE/Gr I / TVL / March / 2019 / 008
SWATHI CONSTRUCTIONS
No: 1-B/2, High Ground Road,
PALAYAMKOTTAI - 627 002.
Ph: 94433 - 62000, 0462 - 2560598

REG.ARCHITECT/ ENGINEER

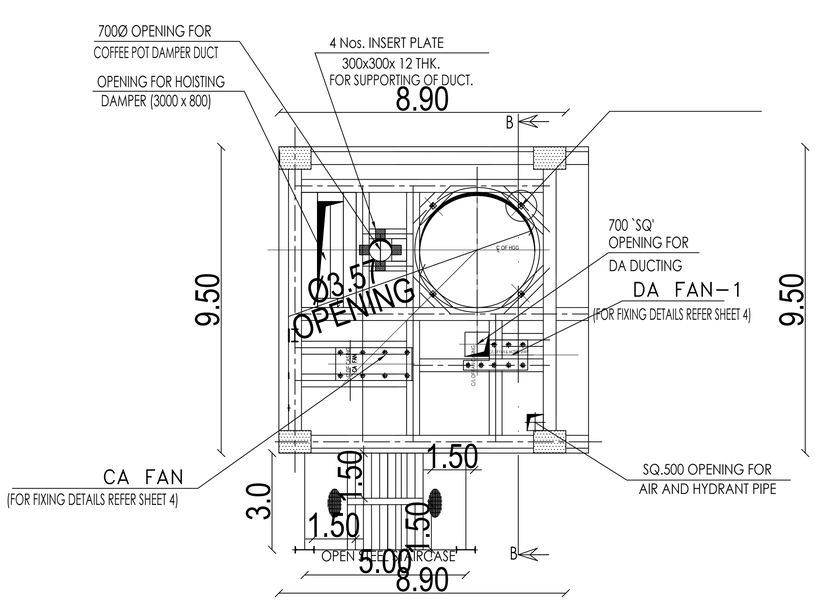

SECOND FLOOR PLAN +13.10m LVL

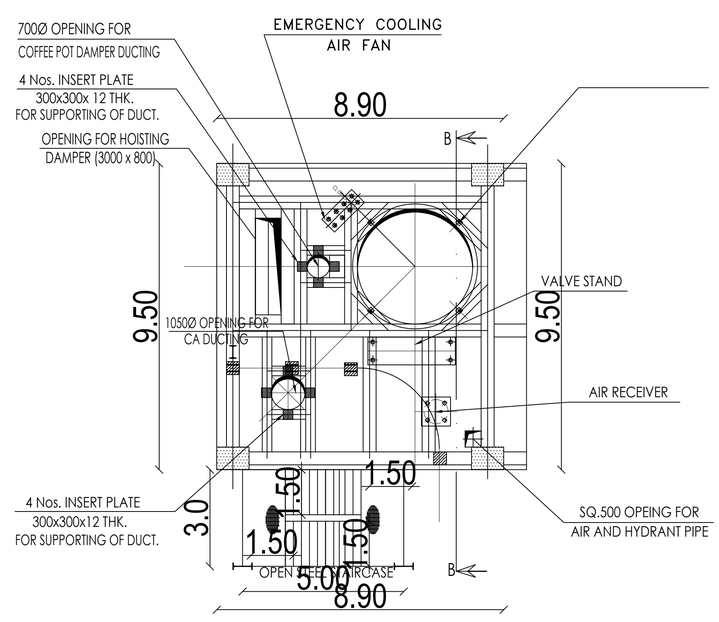

THIRD FLOOR PLAN +17.85m LVL

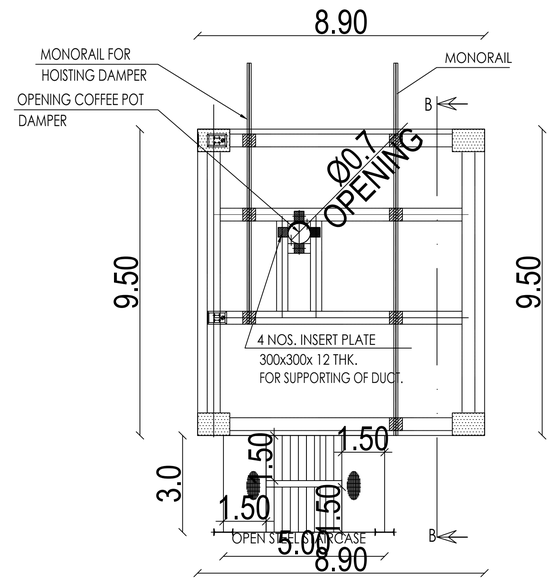

FOURTH FLOOR PLAN +26.70m LVL

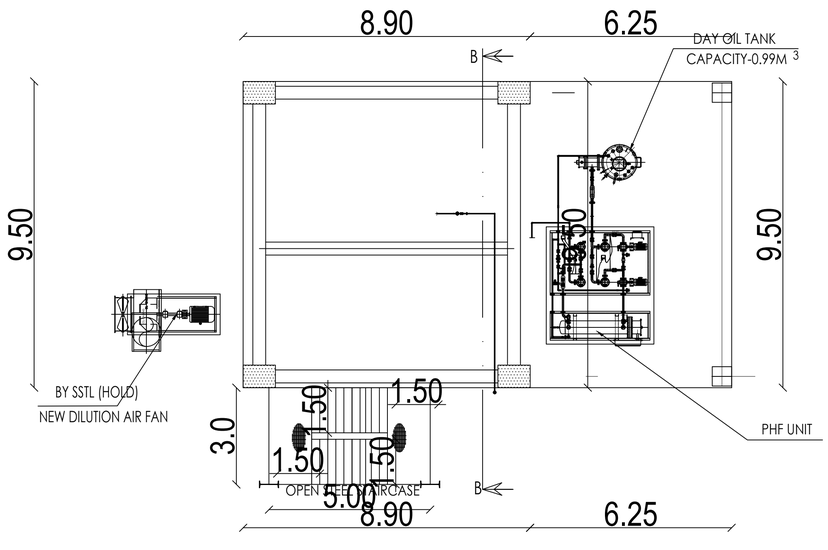

GROUND FLOOR PLAN +0.00m LVL

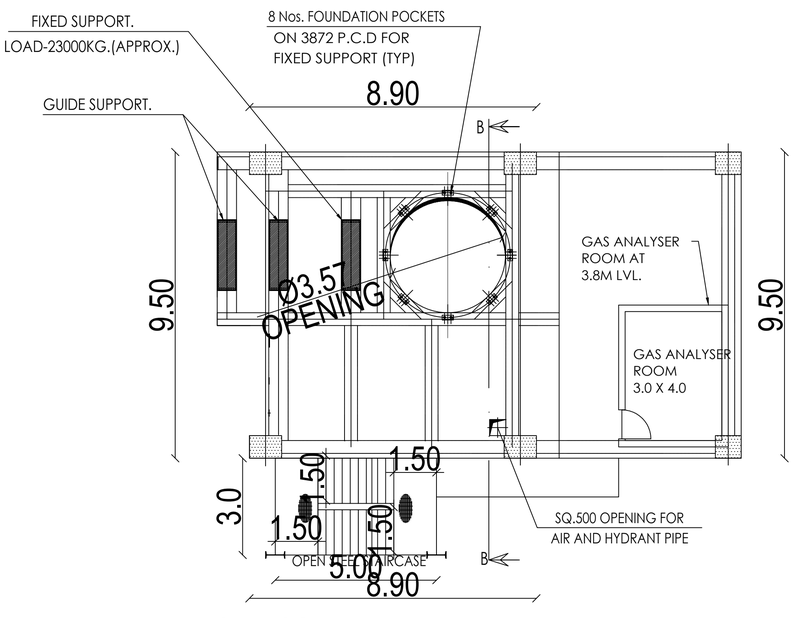

FIRST FLOOR PLAN +6.80m LVL

PROPOSED HAG BUILDING UNIT
BLOCK-112

PLAN SHOWING THE PROPOSED ADDITIONAL CONSTRUCTION INDUSTRIAL BUILDING (SILO AND GGBS BIN FEEDING, AERATION, EXTRACTION & BLENDING SYSTEM) FOR M/s THE INDIA CEMENTS LIMITED IN S.NO: 384/1B, 385A/1, 386A/1, 407A/1A, 408B/1A, 409B/1A, 410B/1A, 410B/1B1, 411A/1A, 411A/1B1A, 412B/1A1, 413/1, 414, 415, 416, 417, 418, 419, 420, 421, 422, 423, 424, 837/1A2B, 837/1B2 AT SANKAR NAGAR OF NARANAMMALPURAM PART-1 VILLAGE AND SANKAR NAGAR SPECIAL GRADE TOWN PANCHAYAT, TIRUNELVELI TALUK, TIRUNELVELI DISTRICT.

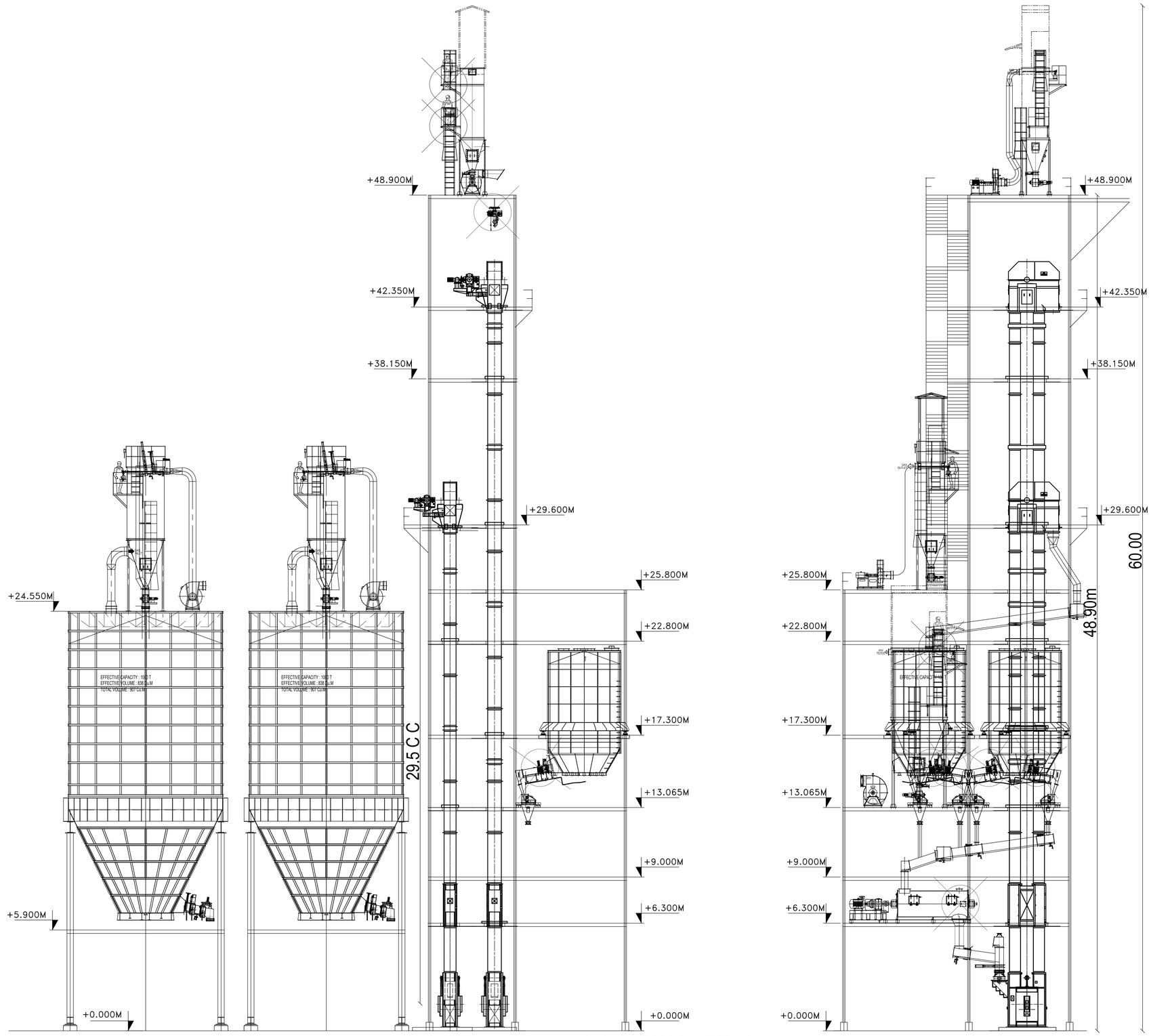

ELEVATION

SILO AND GGBS BIN FEEDING, AERATION, EXTRACTION & BLENDING SYSTEM
BLOCK-113

SECTION

AREA DETAILS				SQ.M
SITE AREA (121Acre 68Cents)				4,92,600.40
BUILDING AREA	Building LVL	FSI AREA IN Sq.m	NON FSI AREA IN Sq.m	TOTAL AREA IN Sq.m
BLOCK-113 SILO AND GGBS BIN FEEDING, AERATION, EXTRACTION & BLENDING SYSTEM				
GROUND FLOOR	+0.00m LVL	156.20	---	156.20
FIRST FLOOR	+6.30m LVL	156.20	---	156.20
SECOND FLOOR	+9.00m LVL	156.20	---	156.20
THIRD FLOOR	+13.06m LVL	156.20	---	156.20
FOURTH FLOOR	+17.30m LVL	156.20	---	156.20
FIFTH FLOOR	+22.80m LVL	156.20	---	156.20
SIXTH FLOOR	+25.80m LVL	156.20	---	156.20
SEVENTH FLOOR	+29.60m LVL	44.20	---	44.20
EIGHTH FLOOR	+38.15m LVL	44.20	---	44.20
NINTH FLOOR	+42.35m LVL	44.20	---	44.20
TENTH FLOOR	+48.90m LVL	44.20	---	44.20
SILO AREA				
SILO 1	+24.55m LVL	78.54	---	78.54
SILO 2	+24.55m LVL	78.54	---	78.54
TOTAL FLOOR AREA		1427.28		1427.28

Er. N. BALAMURUGAN, DCE., B.E.,
Registered Construction Engineer
Reg. No. RCE / TVLR / 11 / 2019
12/6A, South Car Street, Town Plaza,
(Near by Santhi Vinayagar Kovil)
Tirunelveli Town - 627 006.
Cell No: 81221 55332.
Email ID: balamurugan18@gmail.com

CONSTRUCTION ENGINEER

Er. G. Muralidharan,
B.E., A.M.I.E., PGDQSV, F.I.V., M.Sc(Value Edu)
Registered Structural Engineer (HD)
Reg. No: RSS/Gr II / TVL / March / 2014 - 021
SWATHI CONSTRUCTIONS
No: 1-B/2, High Ground Road,
PALAYAMKOTTAI - 627 002.
Ph: 94433 - 62000, 0462 - 2560598

REG.STRUCTURAL ENGINEER

For THE INDIA CEMENTS LIMITED..
AUTHORISED SIGNATORY

APPLICANT

Er. G. Muralidharan,
B.E., A.M.I.E., PGDQSV, F.I.V., M.Sc(Value Edu)
Registered Engineer Grade - I (RE)
Reg. No: RE/Gr I / TVL / March / 2016 - 0001
SWATHI CONSTRUCTIONS
No: 1-B/2, High Ground Road,
PALAYAMKOTTAI - 627 002.
Ph: 94433 - 62000, 0462 - 2560598

REG.ARCHITECT/ ENGINEER

PLAN SHOWING THE PROPOSED ADDITIONAL CONSTRUCTION INDUSTRIAL BUILDING (SILO AND GGBS BIN FEEDING, AERATION, EXTRACTION & BLENDING SYSTEM) FOR M/s THE INDIA CEMENTS LIMITED IN S.NO: 384/1B, 385A/1, 386A/1, 407A/1A, 408B/1A, 409B/1A, 410B/1A, 410B/1B1, 411A/1A, 411A/1B1A, 412B/1A1, 413/1, 414, 415, 416, 417, 418, 419, 420, 421, 422, 423, 424, 837/1A2B, 837/1B2 AT SANKAR NAGAR OF NARANAMMALPURAM PART-1 VILLAGE AND SANKAR NAGAR SPECIAL GRADE TOWN PANCHAYAT, TIRUNELVELI TALUK, TIRUNELVELI DISTRICT.

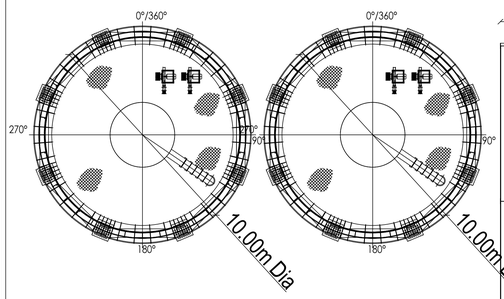

SILO PLAN AT +24.55 M LVL.

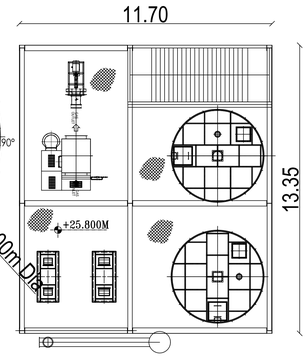

SIXTH FLOOR PLAN AT +25.800 M LVL.

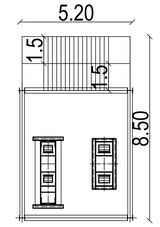

SEVENTH FLOOR PLAN AT +29.600 M LVL.

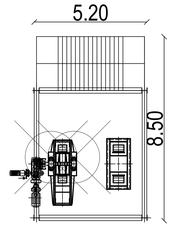

EIGHTH FLOOR PLAN AT +38.150 M LVL.

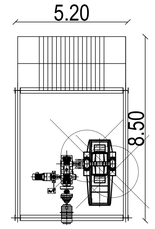

NINTH FLOOR PLAN AT +42.350 M LVL.

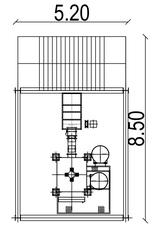

TENTH FLOOR PLAN AT +48.900 M LVL.

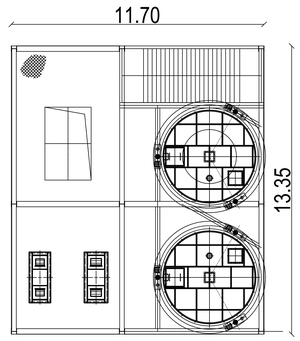

FOURTH FLOOR PLAN AT +17.300 M LVL.

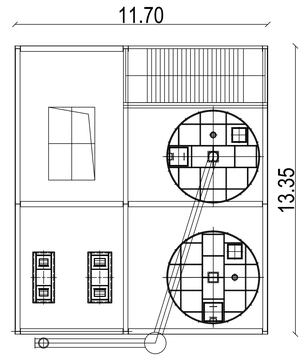

FIFTH FLOOR PLAN AT +22.800 M LVL.

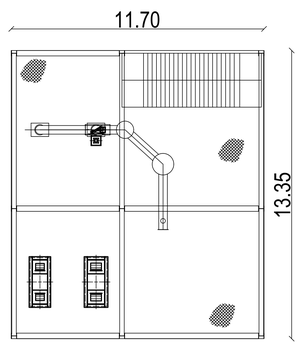

SECOND FLOOR PLAN AT +9.000 M LVL.

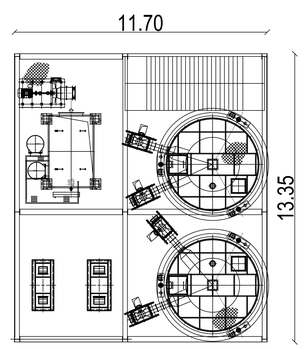

THIRD FLOOR PLAN AT +13.065 M LVL.

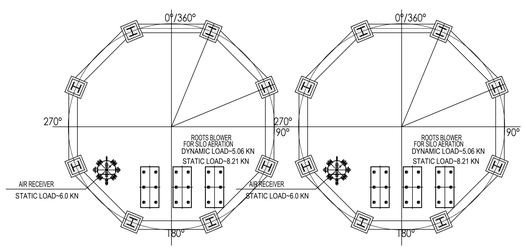

SILO PLAN AT ±0.000 M LVL.

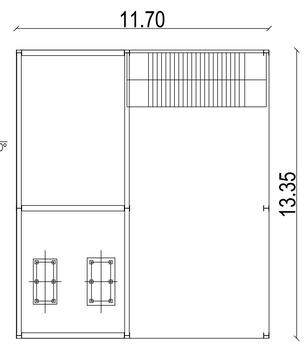

GROUND FLOOR PLAN AT ±0.000 M LVL.

SILO AND GGBS BIN FEEDING, AERATION, EXTRACTION & BLENDING SYSTEM
BLOCK-113

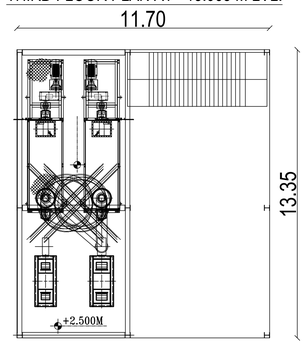

FIRST FLOOR PLAN AT +6.300 M LVL.

AREA DETAILS				SQ.M
SITE AREA (121Acre 68Cents)				4,92,600.40
BUILDING AREA	Building LVL	FSI AREA IN Sq.m	NON FSI AREA IN Sq.m	TOTAL AREA IN Sq.m
BLOCK-113 SILO AND GGBS BIN FEEDING, AERATION, EXTRACTION & BLENDING SYSTEM				
GROUND FLOOR	+0.00m LVL	156.20	---	156.20
FIRST FLOOR	+6.30m LVL	156.20	---	156.20
SECOND FLOOR	+9.00m LVL	156.20	---	156.20
THIRD FLOOR	+13.06m LVL	156.20	---	156.20
FOURTH FLOOR	+17.30m LVL	156.20	---	156.20
FIFTH FLOOR	+22.80m LVL	156.20	---	156.20
SIXTH FLOOR	+25.80m LVL	156.20	---	156.20
SEVENTH FLOOR	+29.60m LVL	44.20	---	44.20
EIGHTH FLOOR	+38.15m LVL	44.20	---	44.20
NINTH FLOOR	+42.35m LVL	44.20	---	44.20
TENTH FLOOR	+48.90m LVL	44.20	---	44.20
SILO AREA				
SILO 1	+24.55m LVL	78.54	---	78.54
SILO 2	+24.55m LVL	78.54	---	78.54
TOTAL FLOOR AREA		1427.28		1427.28

Er. N. BALAMURUGAN, DCE., B.E.,
Registered Construction Engineer
Reg. No. RCE / TVL/R / 11 / 2019
126A, South Car Street, Town Plaza,
(Near by Santhi Vinayagar Kovil)
Tirunelveli Town - 627 006.
Cell No: 81221 65333.
Email ID: balamurugan.civil18@gmail.com

CONSTRUCTION ENGINEER

Er. G. Muralidharan,
B.E.,A.M.I.E.,PGDQSV,F.I.V.M.Sc(Structural)
Registered Structural Engineer (I)
Reg. No: 88508/ II / TVL / March / 2014-2021
SWATHI CONSTRUCTIONS
No: 1-B/2, High Ground Road,
PALAYAMKOTTAI - 627 002.
Ph: 94433 - 62000, 0462 - 2360588

REG.STRUCTURAL ENGINEER

For THE INDIA CEMENTS LIMITED..
AUTHORISED SIGNATORY

APPLICANT

Er. G. Muralidharan,
B.E.,A.M.I.E.,PGDQSV,F.I.V.M.Sc(Structural)
Registered Engineer Grade - I (RE)
Reg. No: RE/S-1 / TVL / March / 2015 - 2020
SWATHI CONSTRUCTIONS
No: 1-B/2, High Ground Road,
PALAYAMKOTTAI - 627 002.
Ph: 94433 - 62000, 0462 - 2360588

REG.ARCHITECT/ ENGINEER

SITE PLAN
SCALE 1:800

EXISTING BUILDING AREA DETAILS

SL No.	NAME	TOTAL HEIGHT OF BUILDING (m)	G.F SQ.MT	F.F SQ.MT	S.F SQ.MT	T.F SQ.MT	F.F SQ.MT	S.F SQ.MT	G.F SQ.MT	H.P USED
	EXISTING BLOCK AREA DETAILS									
1.	COAL STOCK PILE (3m B/F) A.C.SHEET ROOF BUILDING	25.00	8076.00							125.35
2.	WORKSHOP (OLD TRANSPORT BUILDING) A.C.SHEET ROOF BUILDING A.C.SHEET ROOF BUILDING A.C.SHEET ROOF BUILDING	8.41	535.40 535.40 1126.76	127.03						178.80
3.	ADDITIVE ROME HOPPER R.C.C ROOF BUILDING	2.15	218.38	47.60						16.00
4.	ELECTRICAL WORKSHOP A.C.SHEET ROOF BUILDING	8.10	1004.16							
5.	PROCESS PUMP HOUSE (SLURRIES & C.C.WATER COOLING TOWER OLD BUNKER) R.C.C ROOF BUILDING	3.20 6.20	317.85 415.75							135.00
6.	RAW MILL HOPER R.C.C ROOF BUILDING A.C.SHEET ROOF BUILDING	31.70	303.86	303.86	303.86	303.86	180.00			165.30
7.	LIME R.C.C ROOF BUILDING	5.10	104.32							
8.	NEW CRUSHER	16.00	302.87							869.60
9.	WEIGH BRIDGE	3.30	63.92							
10.	COAL INTAKE HOPPER R.C.C FLOOR	2.025	42.75							7.50
11.	ELE HOUSE A.C.SHEET ROOF BUILDING R.C.C ROOF BUILDING	21.00	367.70 203.47	203.47						722.02
12.	FUEL PUMP R.C.C ROOF BUILDING		190.00							
13.	SUB-STATION R.C.C ROOF BUILDING	7.20	252.94	252.94						
14.	LABORATORY CRUSHER A.C.SHEET ROOF BUILDING	5.00	95.75							25.00
15.	FACTORY PUMP HOUSE R.C.C ROOF BUILDING	3.19	112.00							85.00
16.	DOUBLE HAMMER MILLS R.C.C ROOF BUILDING(H.M-2) A.C.SHEET ROOF(H.M-1)	5.20	325.09 342.34							666.00 640.00
17.	V.R.M TOOL ROOM R.C.C ROOF BUILDING	5.00	196.89							
18.	PROJECT DEPT A.C.SHEET ROOF BUILDING	5.675	394.63							16.75
19.	ELECTRICAL DEPT. LC-1 R.C.C ROOF BUILDING	12.50	663.85	663.85	426.10					
20	V.R.M.S.P.DKT R.C.C ROOF BUILDING A.C.SHEET ROOF BUILDING	70.222	1526.63 115.94	715.47	219.30	211.29				815.17
	MILL FAN (E.S.P)		72.96							
21.	PRE-HEATER B RCC	81.622	268.86 270.83	268.86	377.77	409.39	331.21	242.23	329.75	22.96 4798.08
22	BUNDING SLO (33.2m Dia) RAW MATERIAL STORAGE R.C.C ROOF BUILDING	84.342	415.27	415.27	415.27	415.27				1017.75
	COMPRESSOR ROOM	7.00	470.12							
23.	COAL CRUSHER R.C.C ROOF BUILDING	7.50	70.70	70.70						50.00
24.	COAL STORAGE SHED A.C.SHEET ROOF BUILDING	12.20	2200.60							
25.	COAL MILL R.C.C ROOF BUILDING	77.00	748.08	682.18	219.00	292.00	388.68			4338.36
26.	ELECTRICAL DEPT. LC-3	15.90	364.76	364.76	364.76					
27.	COOLER R.C.C ROOF BUILDING	22.422	1218.88	1068.64	913.00					2170.00
28.	C.C.R R.C.C ROOF BUILDING	16.025	640.76	627.80	218.35	627.80				3.00
29.	COAL STORE ROOM A.C.SHEET ROOF BUILDING	3.00	122.24							
30.	COAL DEPT R.C.C ROOF BUILDING	4.00	101.07							
31.	CARBONDAIXI-SECTION A.C.C ROOF BUILDING	4.57	92.94							
32.	SINGLE HAMMER MILLS R.C.C ROOF BUILDING	8.00	202.13							276.00
33.	QUINNY BAG STORED WINDOW LOADING SHED	7.45	638.48							
	A.C.SHEET BUILDING		2087.00							
34.	CEMENT SILO-20A 3.5-B 5Ma R.C.C ROOF BUILDING	21.00	769.99							240.00
35.	E.S.P.7 & AIR COMPRESSORS R.C.C ROOF BUILDING A.C.SHEET BUILDING	29.45	318.40	60.00	170.00	119.00	119.00	119.00		290.00
			870.00							
36.	E.S.P.2 R.C.C ROOF BUILDING	15.80	173.00	137.20	38.80	64.41	110.40	173.00		300.00
	E.S.P.3&4 R.C.C ROOF BUILDING	22.00	436.07	397.40	222.40	320.40				648.10
37.	BAG-HOUSE(ON TRUCK & WINDOW LOADING SHED) A.C.SHEET ROOF BUILDING	7.45	803.67 791.23	67.66						
38.	SALES OFFICE R.C.C ROOF BUILDING	7.45	135.30							
39.	LAVANTORY BLOCK R.C.C ROOF BUILDING	2.85	36.03							
40.	SALES SHIFT ROOM R.C.C ROOF BUILDING	3.35	30.14							
41.	RAIL WAY SIDING OFFICE R.C.C ROOF BUILDING	3.10	31.46							
42.	PACKING HOUSE OFFICE, SALES RECORD ROOM R.C.C ROOF BUILDING	3.35	272.60							
43.	PACKING WORKERS REST ROOM A.C.SHEET ROOF BUILDING	3.66	348.31							
44.	THRIFT SOCIETY R.C.C ROOF BUILDING	3.30	71.35							
45.	SECURITY OFFICE R.C.C ROOF BUILDING	3.30	71.71							
46.	TELEPHONE EXCHANGE R.C.C ROOF BUILDING	4.125	310.23							
47.	REST SHED A.C.SHEET ROOF BUILDING	5.00	182.32							
48.	STORES ROOM(FIRE EXTINGUISHER) R.C.C ROOF BUILDING	3.25	26.97							
49.	OFFICE BUILDING R.C.C ROOF BUILDING	10.21	943.94	890.00	332.44					
49A.	STORES STORE A.C.SHEET ROOF BUILDING	2.21	336.30							
50.	THE OFFICE & SUPERVISRY R.C.C ROOF BUILDING	3.855	164.98							
51.	REST HOUSE R.C.C ROOF BUILDING	3.20	28.86							
52.	STORES BUILDING R.C.C ROOF BUILDING	5.10	339.39							
53.	WORKER REST SHED A.C.SHEET ROOF BUILDING	4.00	240.03							
54.	INCH & RC A.C.SHEET ROOF BUILDING	2.10	24.85							
55.	OFFICE ROOM & TOILET(OPP) R.C.C ROOF BUILDING	3.65	545.12							
	MOTOR WINDING SHOP A.C.SHEET ROOF BUILDING	6.50								
56.	COAL HOPPER EXTENSIONS R.C.C ROOF BUILDING	8.50	15.38							
57.	CEMENT MILLS R.C.C ROOF BUILDING	37.50	1589.71	130.90	798.83	472.36	282.98	130.90		7336.35
	COMPRESSOR ROOM	7.50	211.00							176.00
	SUB-STATION R.C.C ROOF BUILDING	21.30	282.81	190.71	231.48					
58.	CEMENT MILL BUILDING L.T.RM R.C.C.SHEET ROOF BUILDING A.C.SHEET ROOF BUILDING	24.46	594.75	448.00	448.00	222.90	222.90	448.00	222.90	71.10 6763.03
59.	COMPRESSOR ROOM AND SWITCH GEAR R.C.C ROOF BUILDING A.C.SHEET ROOF BUILDING	14.00	1328.60	661.60						1695.50
60.	WEIGHT R.C.C ROOF BUILDING	6.00	273.75							24.00
61.	CLINKER SHED A.C.SHEET ROOF BUILDING		1028.11							
62.	OFFICE SHED A.C.SHEET ROOF BUILDING	7.50	609.60							

EXISTING BUILDING AREA DETAILS

SL NO	NAME	TOTAL HEIGHT OF BUILDING (m)	B.F SQ.MT	G.F SQ.MT	F.F SQ.MT	S.F SQ.MT	T.F SQ.MT	F.F SQ.MT	F.F SQ.MT	S.F SQ.MT	S.F SQ.MT	H.P USED
	EXG BUILDING AREA DETAILS											
63.	CLINKER SILO R.C.C ROOF BUILDING	45.82		655.63	162.56							354.50
	MOTOR DRIVE ROOM A.C.SHEET ROOF BUILDING			162.56	162.56	162.56						
	REJECT CLINKER SILO R.C.C ROOF BUILDING	28.00		129.81	129.81	86.55						
64.	COAL REJECT CHAKOR A.C.SHEET ROOF BUILDING	55.50		822.03								150.00
65.	CHEMICAL TRANSFORMER BUILDING R.C.C ROOF BUILDING		551.00	1055.00	35.00	638.00	210.00	210.00	140.00	259.42		50.00
66.	NEW CEMENT MILL COOLING TOWER WATER TREATMENT PLANT	3.20		58.35								67.50
66.	CEMENT TRANSPORT SYSTEM FROM CEMENT MILL & TO CEMENT SILO	6.00		908.05								204.00
67.	LIME STONE CONVEYOR STACKER HID BELLUMBER	10.20		17592.43								512.41
68.	FLYASH HANDLING SYSTEM WITH WAGATN,TERSILO,CON 2.5 M&7Ma. FLYASH DUMPING FLYASH HOPPER PORTION FEED BOX PORTION	20.00	264.90 84.54 97.32 66.81	68.30								458.50
69.	IN TERMITIAL FUEL FEEDING FOR KILN	42.19		21.56								9.50
70.	DRY SUTLICKA WINDOW LOADING SHED) A.C.SHEET ROOF BUILDING			1909.01								
71.	COOLER ESP	23.925		192.32								595.50
72.	BELT BUCKET ELEVATOR WITH BAG FILTR	101.35		20.40								204.00
73.	FLE COMPACTOR 800mmxH.8M & 900mmxW.15M			303.90								32.50
74.	1000mm BELT CONVEYOR(11BB) G.I SHEET ROOF BUILDING	6.10		132.53								50.00
75.	1000mm BELT CONVEYOR(11BB) G.I SHEET ROOF BUILDING	7.50		594.27								115.00
76.	1000mm BELT CONVEYOR(11BB1/1BB) G.I SHEET ROOF BUILDING	4.20		494.98								180.00
77.	800mm BELT CONVEYOR(12BB) G.I SHEET ROOF BUILDING	2.65		425.87								107.50
78.	1000mm BELT CONVEYOR(12BB/14BB) G.I SHEET ROOF BUILDING	34.50		914.50								317.50
79.	800mm BELT CONVEYOR(13BB) G.I SHEET ROOF BUILDING	27.20		156.01								17.50
80.	800mm BELT CONVEYOR(22BB) G.I SHEET ROOF BUILDING	18.80		235.63								56.00
81.	1000mm BELT CONVEYOR(23BB) R.C.C ROOF BUILDING G.I SHEET ROOF BUILDING	6.00		105.45 45.00								29.50
82.	800mm BELT CONVEYOR(31B) G.I SHEET ROOF BUILDING	17.37		410.78								30.00
83.	800mm BELT CONVEYOR(37B) G.I SHEET ROOF BUILDING	32.49		775.65								56.00
84.	800mm BELT CONVEYOR(ROTORWITH) G.I SHEET ROOF BUILDING	28.50		792.52								107.50
85.	WATER BASIN R.C.C FLOOR	4.61		1864.00								276.00
86.	HSD OIL STORAGE FOR DEHAIET A.C.SHEET ROOF BUILDING	3.00		70.55								33.00
87.	MCC PANEL ROOM R.C.C ROOF BUILDING	8.65		147.03								
88.	STORAGE BUILDING A.C.SHEET ROOF BUILDING	9.60		584.00								9.00
89.	RED OXIDEN BUILDING R.C.C ROOF BUILDING	10.06		511.62	020.22							6.00
90.	COAL & LIMESTONE HANDLING SYSTEM FOR 40 MW POWER PLANT A.C.SHEET ROOF BUILDING	38.00		369.16								2333.50
91.	WATER TREATEMENT PLANT R.C.C ROOF BUILDING	9.00		709.97								197.00
92.	2x110 TPH CIRCULATING FLUIDIZED BED COMBUSTION BOILER A.C.SHEET ROOF BUILDING	56.50		1852.74								5098.40
93.	HR COOLED STEAM CONDENSER R.C.C ROOF BUILDING	22.00		1928.40								2356.00
94.	A.T.U BUILDING R.C.C ROOF BUILDING	25.00		3844.40	3844.40							4258.00
95.	FLYASH & BEDASH SILO R.C.C ROOF BUILDING	23.78		100.34								76.00
96.	RAW WATER & FIRE WATER TANK R.C.C ROOF BUILDING	5.00		724.75								459.00
97.	COOLING TOWER R.C.C ROOF BUILDING	16.00		163.00								600.00
98.	110 M HEIGHT RCC TWIN CHIMNEY	110.00		41.67								
99.	COMPRESSOR HOUSE R.C.C ROOF BUILDING	5.00		455.56								1042.00
100.	OVER HEAD TANK R.C.C ROOF BUILDING	17.58		28.09								
101.	SWITCH GEAR ROOM R.C.C ROOF BUILDING	4.35		45.30								
102.	FLYASH SILO BIN BITS R.C.C ROOF BUILDING	36.50		169.63								270.20
103.	CEMENT TRUCK INSPECTION CABIN A.C.SHEET ROOF BUILDING	5.20		16.56								
104.	METAHS STORAGE SHED A.C.SHEET ROOF BUILDING	14.00		716.40								27.50
105.	COMPRESSOR HOUSE R.C.C ROOF BUILDING	7.00		139.67								332.35
106.	PRE HEATER 1 HAS&2 FLEX FOR R.B.D.SWITCH FOR 1 KWH BRK FOR METAHS SYSTEM	16.50		262.08								2098.00
107.	CEMENT MILL-I	30.30	247.00	1206.00	182.00	387.00	260.00	377.00	351.00	170.00		
108.	FLYASH SILO-SHIFT	46.00		96.00	96.00	44.16						
109.	DUMP HOPPER AND MILL FEED HOPPER	22.00		529.00								
110.	CONVEYORS AND ARTICLES			603.00								
			798.00	80930.04	10962.52	7101.64	3876.83	2185.13	1668.34	982.13	94.06	

PROPOSED BUILDING AREA DETAILS

	PROPOSED BLOCK DETAILS AREA		EXI AREA SQ.Mts	NEW PROP AREA SQ.Mts	TOTAL AREA SQ.Mts
111.	BLOCK-111 MCC ROOM FOR HAG/SLAG SILO BUILDING				
	GROUND FLOOR		158.40		158.40
112.	BLOCK-112 HAG BUILDING UNIT				
	GROUND FLOOR	+0.00m LVL	158.92	---	158.92
	FIRST FLOOR	+4.00m LVL	158.92	---	158.92
	SECOND FLOOR	+13.10m LVL	99.55	---	99.55
	THIRD FLOOR	+17.05m LVL	99.55	---	99.55
	FOURTH FLOOR	+26.79m LVL	99.55	---	99.55
	TOTAL FLOOR		616.49	---	616.49
113.	BLOCK-113 SILO AND CGBS BIN FEEDING, AERATION, EXTRACTION & BLENDING SYSTEM				
	GROUND FLOOR	+0.00m LVL	156.20	---	156.20
	FIRST FLOOR	+6.36m LVL	156.20	---	156.20
	SECOND FLOOR	+9.00m LVL	156.20	---	156.20
	THIRD FLOOR	+13.00m LVL	156.20	---	156.20
	FOURTH FLOOR	+17.30m LVL	156.20	---	156.20
	FIFTH FLOOR	+22.80m LVL	156.20	---	156.20
	SIXTH FLOOR	+25.40m LVL	156.20	---	156.20
	SEVENTH FLOOR	+29.60m LVL	44.20	---	44.20
	EIGHTH FLOOR	+38.15m LVL	44.20	---	44.20
	NINTH FLOOR	+42.35m LVL	44.20	---	44.20
	TENTH FLOOR	+48.50m LVL	44.20	---	44.20
	SILO AREA SILO 1	+24.55m LVL	78.54	---	78.54
	SILO 2	+24.55m LVL	78.54	---	78.54
	TOTAL FLOOR AREA		1427.28		1427.28
	TOTAL PROPOSED BUILDING AREA		2202.17		2202.17

SITE PLAN SHOWING THE PROPOSED ADDITIONAL CONSTRUCTION INDUSTRIAL BUILDING (MCC ROOM FOR HAG/SLAG SILO BUILDING) (HAG BUILDING UNIT) (SILO AND CGBS BIN FEEDING, AERATION, EXTRACTION & BLENDING SYSTEM) FOR M/s THE INDIA CEMENTS LIMITED IN S.NO. 384/1B, 385A/1, 386A/1, 407A/1A, 408B/1A, 409B/1A, 410B/1A, 410B/1B1, 411A/1A, 411A/1B1A, 412B/1A1, 413/1, 414, 415, 416, 417, 418, 419, 420, 421, 422, 423, 424, 837/1A2B, 837/1B2 AT SANKAR NAGAR OF NARANAMMALPURAM PART-1 VILLAGE AND SANKAR NAGAR SPECIAL GRADE TOWN PANCHAYAT, TIRUNELVELI TALUK, TIRUNELVELI DISTRICT.

ALL DIMENSIONS ARE IN METER, SCALE 1:800

SITE AREA DETAILS

SURVEY No.	EXTENT IN ACRES
384 / 1B	0.36
385 A/1 & 386 A/1	58.41
407 A/1A	2.70
408 B/1A	2.49
409 B/1A	3.01
410 B/1A	2.69
410 B/1B1	1.53
411 A/1A	1.21
411 A/1B1A	2.39
412 B/1A1	5.09
413 /1	5.36
414	4.68
415	1.75
416	1.76
417	5.92
418	7.55
419	2.28
420	2.10
421	3.01
422	2.70
423	1.25
424	1.25
837 /1A2B	0.97
837 /1B2	0.22
TOTAL	121.68

OSR AREA

Sl.No.	OSR AREA
1	7300 SQM
2	5400 SQM
3	4700 SQM
4	3000 SQM
5	2000 SQM
6	3000 SQM
7	6500 SQM
8	1500 SQM
9	1500 SQM
10	1600 SQM
11	3000 SQM
12	3300 SQM
13	6050 SQM
14	5400 SQM
TOTAL=54250 SQM	
(13.40 ACRES)	

FACTORY AREA =121.68 ACRES

OSR AREA = 13.40 ACRES

AREA DETAILS

		SQ.M
TOTAL SITE AREA	121 Acres 68 Cents	4,92,600.40
EXISTING BUILDING AREA		1,16,596.69
PROPOSED BUILDING AREA		2202.17

PLOT COVERAGE

PLINTH AREA OF G.F / TOTAL SITE AREA = (65660.64 / 4,92,600.40) x 100 = 18.18 %

FLOOR AREA RATIO

ALL FLOOR AREA / TOTAL SITE AREA = 118798.86 / 4,92,600.40 = 0.241 = 2.0

EXISTING BUILDING PARKING DETAILS

LORRY PARKING 233Nos Provided

PROPOSED BUILDING PARKING DETAILS

Proposed Building Area = 2202.17 Sq.m

750 Sq.m = 1 Lorry Space

2202.17 / 750 = 2.94 SAY 3

Required parking= 3 Lorry Space

Provied parking = 4 Lorry Space

75 Sq.m = 1 Two wheeler

2202.17 / 75 = 29.36 SAY 30

Required parking = 30 Two wheeler

Provied parking = 30 Two wheeler

75 Sq.m = 1 Cycle space

2202.17 / 75 = 29.36 SAY 30

Required = 30 Cycle space

Provied = 30 Cycle space

LEGENDS

- SITE BOUNDARY
- EXISTING BUILDING
- PROPOSED BUILDING
- ROAD
- OSR AREA

OFFICE USE

Er. N. BALAMURUGAN, B.E., B.E., Registered Construction Engineer Reg. No. RCE / TVLR / 11 / 2019 136A, South Car Street, Town Plaza, (Near by Senthil Vinayagar Kovil) Tirunelveli Town - 627 006. Cell No: 91221 55333. Email ID: balamuruganer@gmail.com

CONSTRUCTION ENGINEER

Er. G. Muralidharan, B.E., A.M.I.E., PGDSM., F.I.V.S.E., M.I.P.E. Registered Structural Engineer Reg. No. 3209 / LTTP / Madurai / 2013 SIVATHI CONSTRUCTIONS No. 1-B/2, High Ground Road, PALAYAMKOTTAI - 627 002. Ph: 94433 - 63000, 0462 - 2566599

REG.STRUCTURAL ENGINEER

For THE INDIA CEMENTS LIMITED.

AUTHORIZED SIGNATORY

APPLICANT

Er. G. Muralidharan, B.E., A.M.I.E., PGDSM., F.I.V.S.E., M.I.P.E. Registered Structural Engineer Reg. No. 3209 / LTTP / Madurai / 2013 SIVATHI CONSTRUCTIONS No. 1-B/2, High Ground Road, PALAYAMKOTTAI - 627 002. Ph: 94433 - 63000, 0462 - 2566599

REG.ENGINEER

THE LANDLENS SUITE

Eight ways to know a piece of land before you pay for it.

This report covers one part of the picture. These cover the rest, drawn from the same government records, for any property in Tamil Nadu.

LandLens One
Ask anything about a property and get an answer grounded in live government records, with the sources shown.
/landlens/one

Verify My Land
Every record check run on one property and returned as a single report.
/landlens/verify-my-land

Legal Opinion
An advocate's written opinion on the title, built on the records we pull for it.
/landlens

One Map
Every layer on one map: the parcel, its boundary, zoning, water bodies and what sits around it.
/landlens/one/map

PriceMap
What land actually changed hands for around this plot, taken from the registered deeds.
/landlens/pricemap

Build Scope
What you are allowed to build here: floor space, height, coverage and setbacks.
/landlens/build-scope

Property Tracker
Watch a property and hear about it when something new is registered against it.
/landlens/property-tracker

Deal Room
Run the transaction in one place: documents, stamping, signatures and the parties.
/landlens/deal-room

hello@verified.realestate · +91 9996 12 9996

FREE TOOLS · NO ACCOUNT NEEDED

Twenty-four checks you can run yourself, at no cost.

Records and verification

The registers themselves, read for you.

- Encumbrance Certificate
- Patta and Chitta
- Field Measurement Sketch
- EC Analyzer
- Bank charge check
- Court case search
- Seller background check
- Approval check by survey

Value and duty

What it is worth and what it costs to register.

- Guideline value by street
- Guideline value by survey
- Stamp duty and registration fees
- Capital gains
- Floor space index
- Area unit converter

Zoning and land use

What the plan says can happen on this land.

- Land use zone finder
- CMDA land use check
- Coastal regulation zone
- Master plan check
- Water bodies finder
- Airport height clearance

Registers and directories

Who holds it, and which office keeps the record.

- Find your registering office
- Temple property check
- Waqf property check
- RERA register

Every free tool
/tools

Services we run for you
/services

The LandLens suite
/landlens/one

Verified RealEstate™

Every claim in this document traces back to a government record.

- Legal opinions, due diligence and title verification
- Building plan, layout and sub-division approvals
- Completion and occupancy certificates, regularisation
- Escrow, negotiation and NRI property management
- Land survey, soil testing, architecture and construction

Verified RealEstate
3/350/2 Mettukuppam,
OMR Thoraipakkam,
Chennai 600 097, India
hello@verified.realestate
+91 9996 12 9996

Prepared from the registers named on the page each finding sits on. Where a register could not be read, this document says so in its place rather than leaving the gap to be read as a clean result.