PP APPROVAL RECORD

Planning Permission

Theni

Tiruvannamalai district, Tamil Nadu

APPROVAL TYPE
Building Plan

ISSUING AUTHORITY
DTCP

The approval as the planning authority issued it, reproduced in full behind this page.

An approval speaks to what was sanctioned, not to what was built. Completion is a separate record.

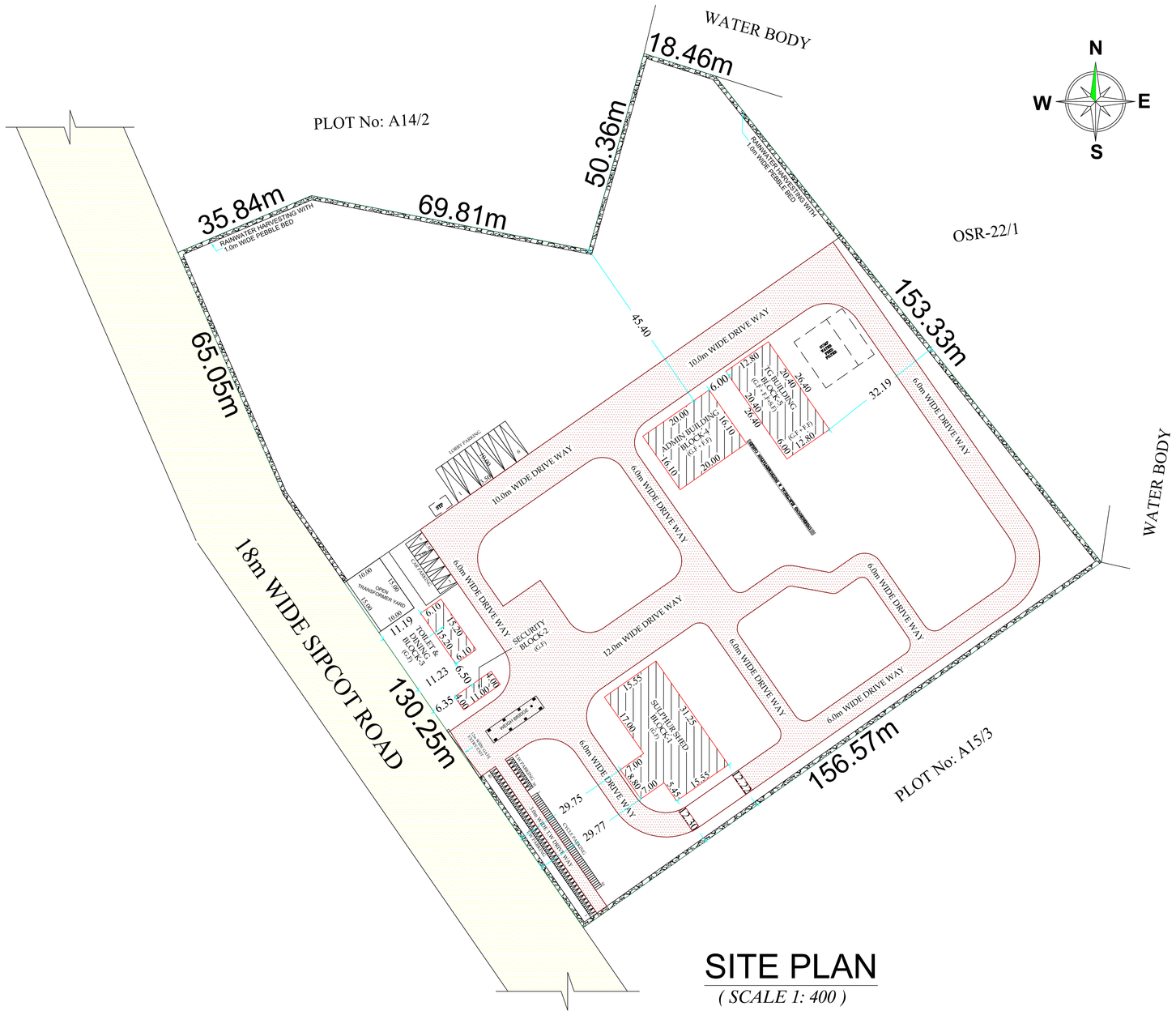

SITE PLAN

(SCALE 1: 400)

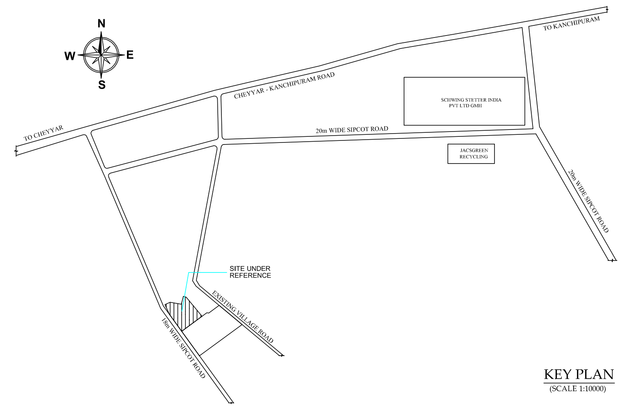

KEY PLAN
(SCALE 1:10000)

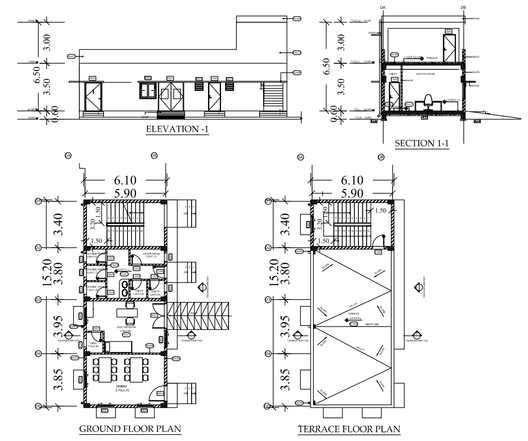

TOILET & DINING BLOCK-3

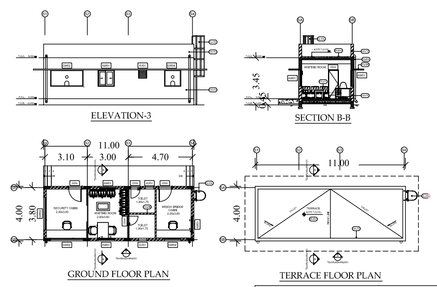

SECURITY BLOCK-2

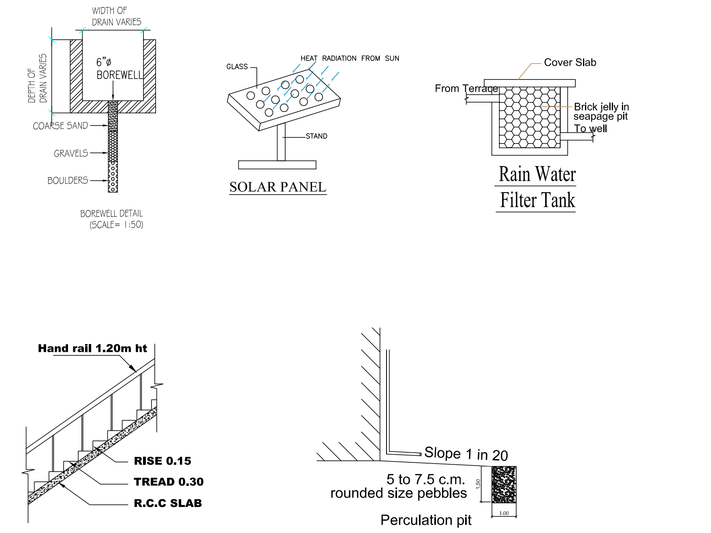

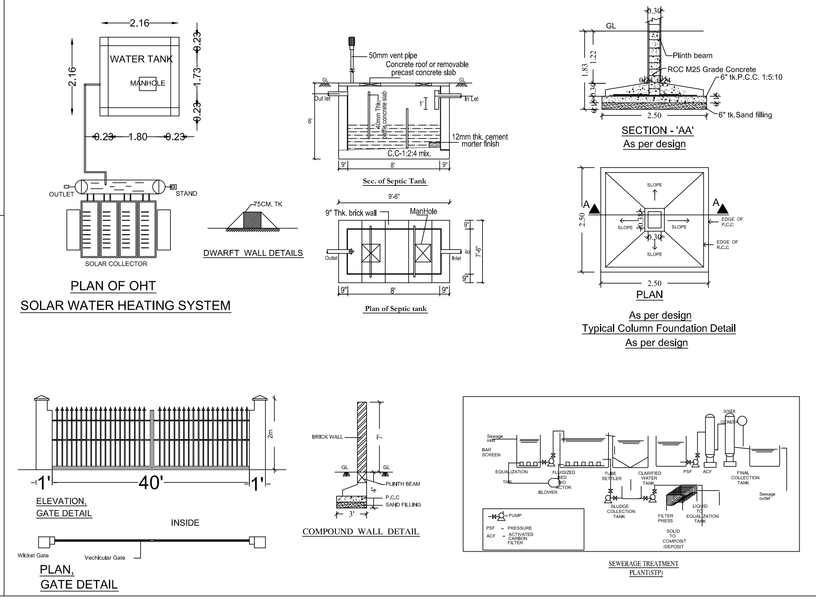

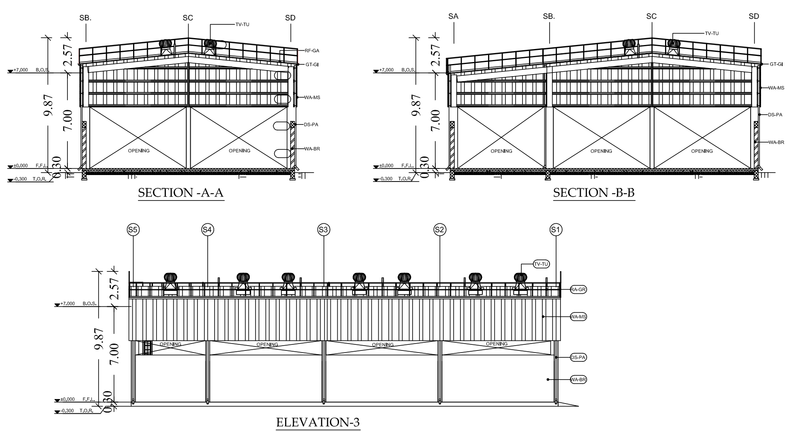

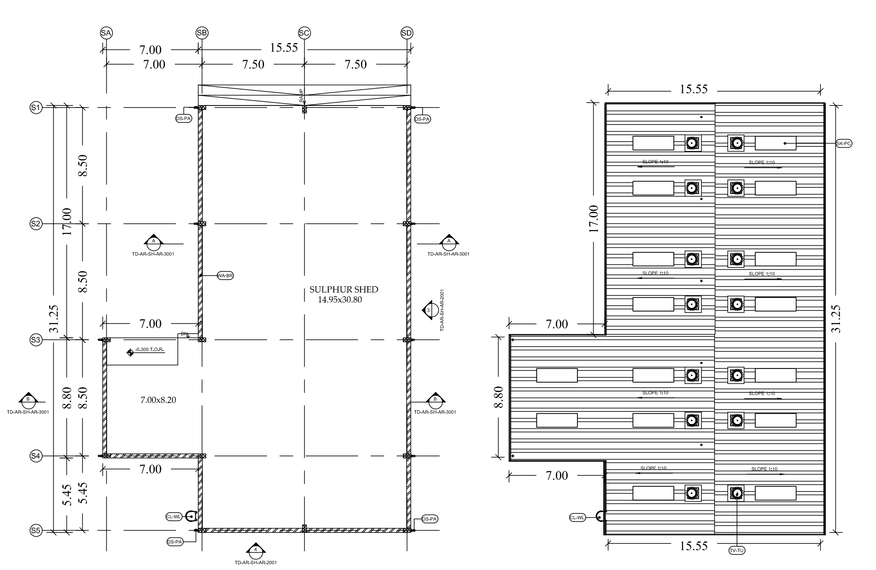

SULPHUR SHED BLOCK-1

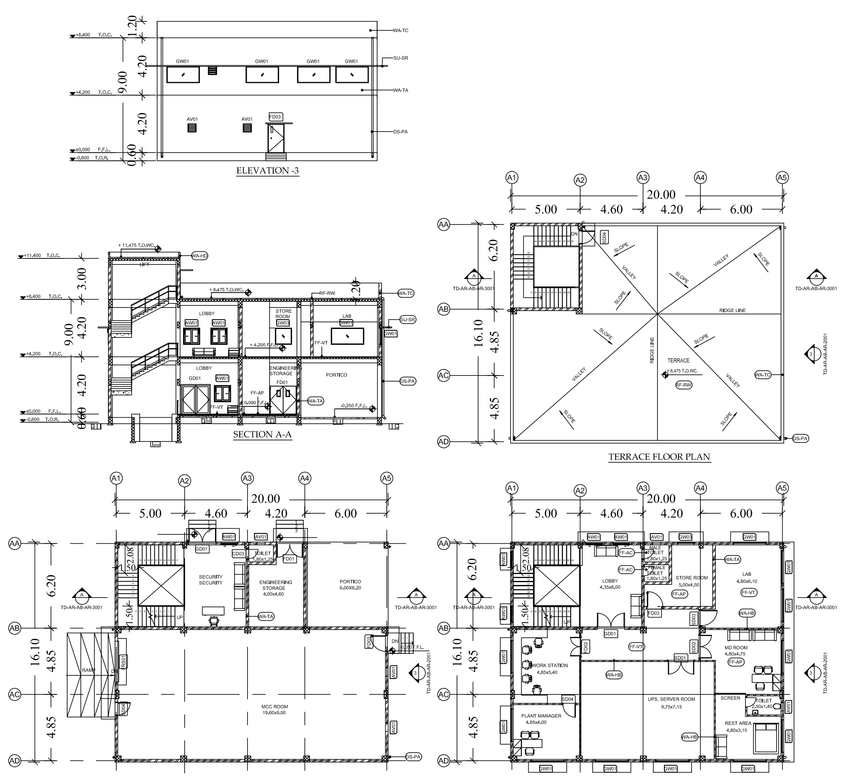

ADMIN BLOCK-4

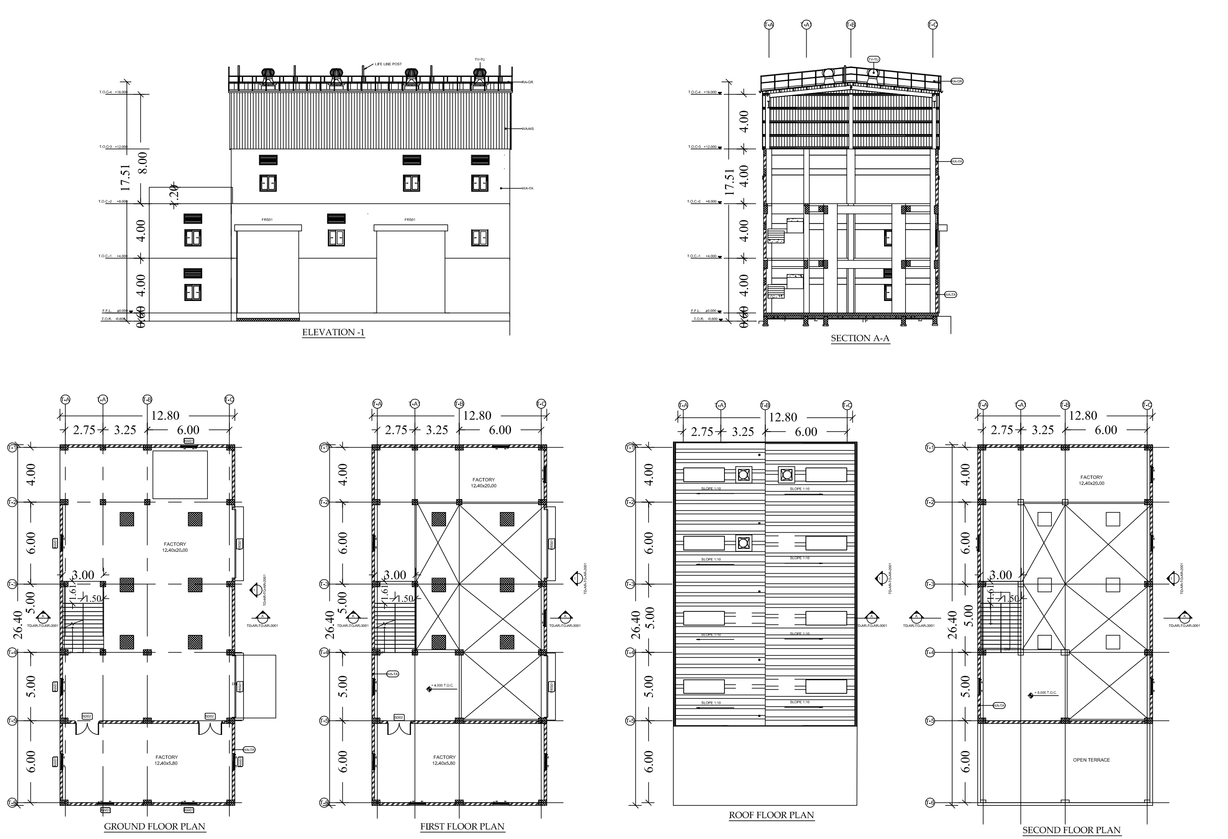

TG BUILDING BLOCK-5

PLAN SHOWING THE PROPOSED CONSTUCTION OF INDUSTRIAL BUILDING M/S CALCIMAG CHEMICALS (INDIA) PVT. LTD PLOT No: A-15/4 S.Nos: 173/1A1Pt, 1A2Pt, 1B1Pt, 2A1pt, 2A2Pt, 2A3Pt, AT KUNNAVAKKAM VILLAGE, 232/1Pt, 2Pt, 237/6Pt, AT KARANAI VILLAGE, SIPCOT INDUSTRIAL COMPLEX, PHASE-II CHEYYAR, KUNNAVAKKAM VILLAGE & KARANAI VILLAGE, CHEYYAR TALUK, TIRUVANNAMALAI DISTRICT.

CATEGORY - RED
MFG. OF SULPHURIC ACID

SIPCOT INDUSTRIAL COMPLEX
CHEYYAR, PHASE-II
LAYOUT APPROVED No : 36/ 2022

AREA DETAIL:

			Sq.m
TOTAL PLOT AREA AS PER DOCUMENT			25009.57 (6.18 Acres)
SUPERIMPOSED AREA			25051.63
SL.NO	BUILDING NAME	FSI IN Sq m	NON FSI IN Sq m	TOTAL AREA IN Sq m
1.	**SULPHUR SHED BLOCK-1**			
	GROUND FLOOR	547.54	-	547.54
2.	**SECURITY BLOCK-2**			
	GROUND FLOOR	44.00	-	44.00
3.	**TOILET & DINING BLOCK-3**			
	GROUND FLOOR	92.72	-	92.72
4.	**ADMIN BLOCK-4**			
	GROUND FLOOR	322.00	-	322.00
	FIRST FLOOR	322.00	-	322.00
5.	**TG BUILDING BLOCK-5**			
	GROUND FLOOR	337.92	-	337.92
	FIRST FLOOR	337.92	-	337.92
	SECOND FLOOR	261.12	-	261.12
	TOTAL	2265.22	-	2265.22

REFERENCE

DESCRIPTION	CALCULATION	REQUIRED	PROPOSED
PLOT COVERAGE	1344.18 / 25009.57 X 100	75%	5.37%
FLOOR SPACE INDEX	2265.22 / 25009.57	1.5	0.09

JOINERY DETAILS:

REF.NO	DESCRIPTION	WIDTH	HEIGHT
CD03	SINGLE LEAF WOODEN PLASTIC COMPOSITE DOOR	750	2100
FD01	DOUBLE LEAF 120 MINS FIRE RATED STEEL DOOR WITH VISION PANEL	2000	2100
FD02	DOUBLE LEAF 120 MINS FIRE RATED EMERGENCY STEEL DOOR WITH VISION PANEL & PANIC BAR	1500	2100
FD03	SINGLE LEAF 120 MINS FIRE RATED EMERGENCY STEEL DOOR WITH VISION PANEL & PANIC BAR	1200	2100
FRS01	MOTORIZED OPERATED 120 MINS FIRE RATED ROLLING SHUTTER	3000	3000
GD01	DOUBLE LEAF FRAMELESS GLASS DOOR	2000	2100
SD01	DOUBLE LEAF STEEL DOOR WITH VISION PANEL (500X700)	2000	2100
SD02	DOUBLE LEAF STEEL DOOR WITH VISION PANEL (500X700)	1800	2100
SD03	SINGLE LEAF STEEL DOOR WITH VISION PANEL (200x450)	1200	2100
SD04	SINGLE LEAF STEEL DOOR WITH VISION PANEL (200x450)	1000	2100
AV01	ALUMINIUM FRAMED VENTILATOR	600	600
AW01	DOUBLE SLIDER ALUMINIUM FRAMED WINDOW (SGU)	1200	1200
GW01	FIXED GLASS ALUMINIUM FRAMED WINDOW (DGU)	2400	1200
GW03	FIXED GLASS ALUMINIUM FRAMED WINDOW (DGU)	1200	1200

COLOUR INDEX

- PROPOSED SITE
- PROPOSED BUILDING
- EXISTING ROAD
- DRIVEWAY

SCALE 1: 100

ALL DIMENSIONS ARE IN METRES

H.P REQUIRED - 1973.00HP

PARKING CALCULATION

SLOT	REQUIRED	PROVIDED
LORRY	05 Nos	06 Nos
CAR	06 Nos	06 Nos
TWO WHEELER	46 Nos	50 Nos
CYCLE	46 Nos	50 Nos

NOTES:-

1. ALL DIMENSIONS ARE IN METER
2. FIRE FIGHTING ARRANGEMENTS WILL BE PROVIDED
3. SOLAR WATER HEATING SYSTEM PROVIDED.
4. RAINWATER HARVESTING FACILITIES PROVIDED
5. WATER FACILITIES PROVIDED
6. DRAINAGE TO BE CONNECTED WITH PUBLIC SEWER WITH NECESSARY PERMISSION WITH NECESSARY PERMISSION
7. F E - FIRE SAFETY MEASURES PROVIDED.

ONLINE APPLICATION NO : SWP/BPA/0012350/2023
APPROVAL NO : BP/AD-DTCP (TVM) :43/2023

For Calcimag Chemicals India Pvt. Ltd.
Director

APPLICANT:

V.P. KINGS-PRAPPIYAN B.Arch.,
CA/2014/65850
Register Architect Gr-I
DTCP Reg. No:C2/LR/GN/GR-I/2019/06/006
CMDA RA:Gr-I/19/04/140
227, Arihant Majestic Towers, Jawaharlal Nehru Road,
Koyambedu, Chennai - 107. Mobile : 9566233942

ARCHITECT/ENGINEER

Er. R.KATHIRVEL M.E, M.E, M.E.E, PVE,
Structural Engineer-Gr-I
DTCP Reg. No :C2/LR/GN/GR-I/2019/06/011
CMDA RA:Gr-I/19/04/140
DTCP Reg. No :C2/LR/GN/GR-I/2019/06/005
Res : No:W-391,Gli Rmv No.3, Anna Nagar West,
Chennai-600101. Mob:9444100510

STRUCTURAL ENGINEER

Er.G.Manoj Kumar B.E (Civil) M.E (Geotech)
Registered Geotechnical Consultant
GTE/15/03/012-CMDA & GTE/TVL/01/2015-DTCP
GLOBE GEOTECHNIQUES
Cell : 9445315710 & 6381663653
Email: globegeotechniques@gmail.com

GEO-TECH ENGINEER:

THE LANDLENS SUITE

Eight ways to know a piece of land before you pay for it.

This report covers one part of the picture. These cover the rest, drawn from the same government records, for any property in Tamil Nadu.

LandLens One
Ask anything about a property and get an answer grounded in live government records, with the sources shown.
/landlens/one

Verify My Land
Every record check run on one property and returned as a single report.
/landlens/verify-my-land

Legal Opinion
An advocate's written opinion on the title, built on the records we pull for it.
/landlens

One Map
Every layer on one map: the parcel, its boundary, zoning, water bodies and what sits around it.
/landlens/one/map

PriceMap
What land actually changed hands for around this plot, taken from the registered deeds.
/landlens/pricemap

Build Scope
What you are allowed to build here: floor space, height, coverage and setbacks.
/landlens/build-scope

Property Tracker
Watch a property and hear about it when something new is registered against it.
/landlens/property-tracker

Deal Room
Run the transaction in one place: documents, stamping, signatures and the parties.
/landlens/deal-room

hello@verified.realestate · +91 9996 12 9996

FREE TOOLS · NO ACCOUNT NEEDED

Twenty-four checks you can run yourself, at no cost.

Records and verification

The registers themselves, read for you.

- Encumbrance Certificate
- Patta and Chitta
- Field Measurement Sketch
- EC Analyzer
- Bank charge check
- Court case search
- Seller background check
- Approval check by survey

Value and duty

What it is worth and what it costs to register.

- Guideline value by street
- Guideline value by survey
- Stamp duty and registration fees
- Capital gains
- Floor space index
- Area unit converter

Zoning and land use

What the plan says can happen on this land.

- Land use zone finder
- CMDA land use check
- Coastal regulation zone
- Master plan check
- Water bodies finder
- Airport height clearance

Registers and directories

Who holds it, and which office keeps the record.

- Find your registering office
- Temple property check
- Waqf property check
- RERA register

Every free tool
/tools

Services we run for you
/services

The LandLens suite
/landlens/one

Verified RealEstate™

Every claim in this document traces back to a government record.

- Legal opinions, due diligence and title verification
- Building plan, layout and sub-division approvals
- Completion and occupancy certificates, regularisation
- Escrow, negotiation and NRI property management
- Land survey, soil testing, architecture and construction

Verified RealEstate
3/350/2 Mettukuppam,
OMR Thoraipakkam,
Chennai 600 097, India
hello@verified.realestate
+91 9996 12 9996

Prepared from the registers named on the page each finding sits on. Where a register could not be read, this document says so in its place rather than leaving the gap to be read as a clean result.