PP APPROVAL RECORD

# Planning Permission

Tiruvannamalai district, Tamil Nadu

APPROVAL TYPE
**Building Plan**

ISSUING AUTHORITY
**Rural Panchayat**

The approval as the planning authority issued it, reproduced in full behind this page.

An approval speaks to what was sanctioned, not to what was built. Completion is a separate record.

PLAN SHOWING THE PROPOSED CONSTRUCTION FOR RCC TERRACE ROOF RESIDENTIAL BUILDING IN GROUND FLOOR PLAN

AT OLD S.F.NO :95/5, NEW S.F.NO:99/15, THIRUVADIRAYAPURAM VILLAGE & PANCHAYAT, VEMBAKKAM TALUK, TIRUVANNAMALAI DISTRICT.

**ALL DIMENSIONS ARE IN METER. SCALE 1 : 100**

ELEVATION

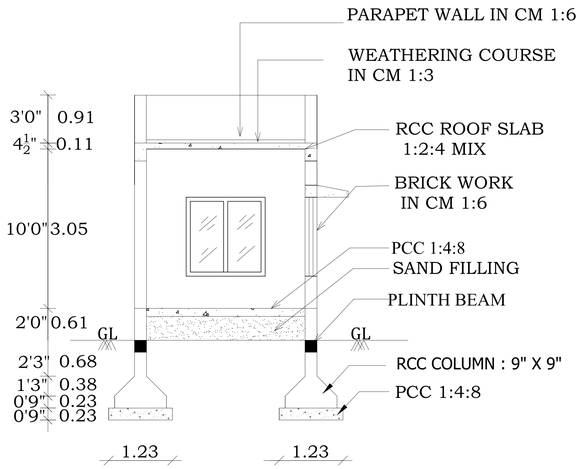


**SECTION - AB**

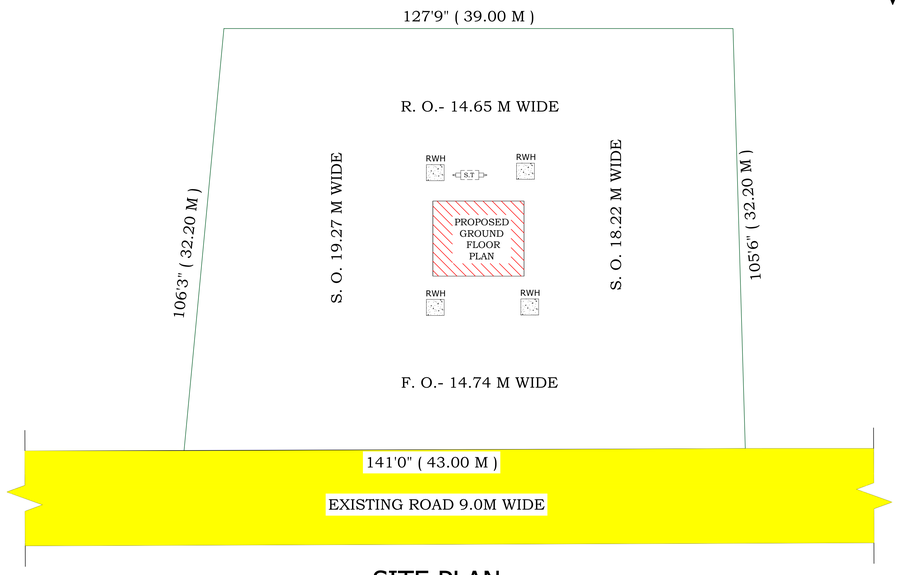


SITE PLAN
SCALE - 1:200

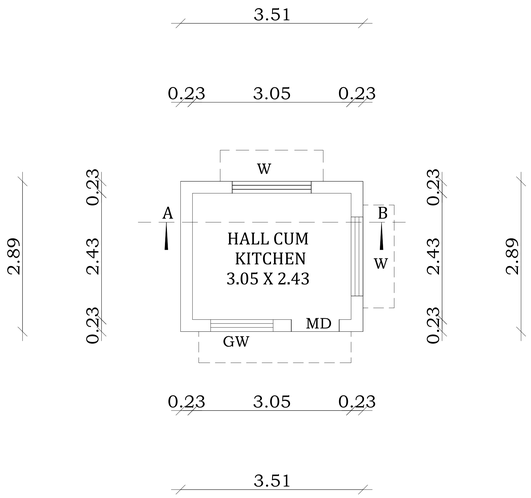


PROPOSED GROUND FLOOR PLAN

SOLAR ENERGY

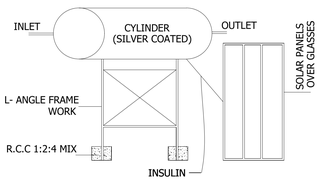


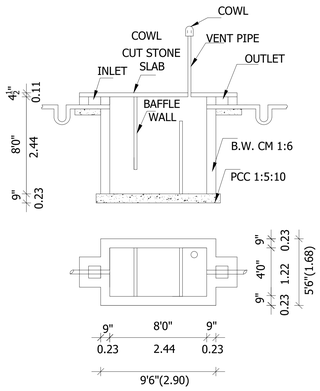


SEPTIC TANK DETAILS

WASTE WATER RECYCLE UNIT

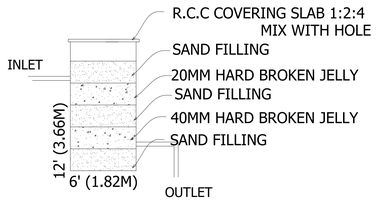


BATH & WASH BASIN PIPE LINE CONNECTION IS DIRECTLY CONNECTED TO THE RECTANGLE PIT FOR RECYCLING THE WASTE WATER.

RAIN WATER HARVEST UNIT

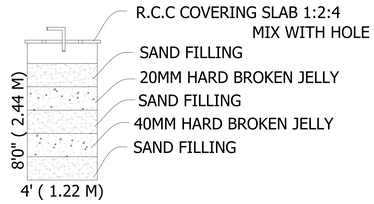


2NOS OF RWH UNIT WITH SIZE 4'0" x 4'0" x 8'0" USING 150MM DIA PVC PIPE WITH NECESSARY FITTINGS.

**NOTE**

OWNERS BOUNDARY SHOWN IN ----------
PROPOSED BUILDING SHOWN IN ----------
EXISTING ROAD SHOWN IN ----------

**AREA DETAILS**

| | SQ.FT. | SQ.M. |
|---|---|---|
| TOTAL AREA OF THE SITE ---------- | 1080.00 | 100.00 |
| PROPOSED BUILDING IN G.F. AREA -------- | 109.00 | 10.14 |
| OPEN SPACE AREA ---------- | 971.00 | 89.86 |

**JOINERY DETAILS**

| | | | |
|---|---|---|---|
| MD ---------- | MAIN DOOR ---------- | 3'0" X 7'0" | 0.91 X 2.13 M |
| D---------- | DOOR ---------- | 3'0" X 7'0" | 0.91 X 2.13 M |
| D1---------- | DOOR ---------- | 2'6" X 7'0" | 0.76 X 2.13 M |
| W ---------- | WINDOW ---------- | 5'0" X 5'0" | 1.52 X 1.52 M |
| GW ---------- | GRILL WINDOW ---- | 3'9" X 5'0" | 1.20 X 1.52 M |
| V ---------- | VENTILATOR ------- | 3'0" X 2'0" | 0.91 X 0.61 M |

**SPCIFICATION**

AS SHOWN IN SECTION ON - AB

**APPLICANT NAME:-**

Mr/Mrs.

**APPLICANT**

Er. S. DHANESH, D.C.D.C.E.,
Registered Engineer-Grade-III,
Reg. No. RE/Gr-III/01/2020
Deputy Director Town and Country Planning
(D.T.C.P.), Vellore - 632 001
Cell No. 99945 27047

**ENGINEER**

**DRG. NO :**
**SD-103-05-2025**

THE LANDLENS SUITE

# Eight ways to know a piece of land before you pay for it.

This report covers one part of the picture. These cover the rest, drawn from the same government records, for any property in Tamil Nadu.

### LandLens One
Ask anything about a property and get an answer grounded in live government records, with the sources shown.
**/landlens/one**

### Verify My Land
Every record check run on one property and returned as a single report.
**/landlens/verify-my-land**

### Legal Opinion
An advocate's written opinion on the title, built on the records we pull for it.
**/landlens**

### One Map
Every layer on one map: the parcel, its boundary, zoning, water bodies and what sits around it.
**/landlens/one/map**

### PriceMap
What land actually changed hands for around this plot, taken from the registered deeds.
**/landlens/pricemap**

### Build Scope
What you are allowed to build here: floor space, height, coverage and setbacks.
**/landlens/build-scope**

### Property Tracker
Watch a property and hear about it when something new is registered against it.
**/landlens/property-tracker**

### Deal Room
Run the transaction in one place: documents, stamping, signatures and the parties.
**/landlens/deal-room**



hello@verified.realestate · +91 9996 12 9996

FREE TOOLS · NO ACCOUNT NEEDED

# Twenty-four checks you can run yourself, at no cost.

## Records and verification

The registers themselves, read for you.

- Encumbrance Certificate
- Patta and Chitta
- Field Measurement Sketch
- EC Analyzer
- Bank charge check
- Court case search
- Seller background check
- Approval check by survey

## Value and duty

What it is worth and what it costs to register.

- Guideline value by street
- Guideline value by survey
- Stamp duty and registration fees
- Capital gains
- Floor space index
- Area unit converter

## Zoning and land use

What the plan says can happen on this land.

- Land use zone finder
- CMDA land use check
- Coastal regulation zone
- Master plan check
- Water bodies finder
- Airport height clearance

## Registers and directories

Who holds it, and which office keeps the record.

- Find your registering office
- Temple property check
- Waqf property check
- RERA register

**Every free tool**
/tools

**Services we run for you**
/services

**The LandLens suite**
/landlens/one

Verified RealEstate™

# Every claim in this document traces back to a government record.

- Legal opinions, due diligence and title verification
- Building plan, layout and sub-division approvals
- Completion and occupancy certificates, regularisation
- Escrow, negotiation and NRI property management
- Land survey, soil testing, architecture and construction

**Verified RealEstate**
3/350/2 Mettukuppam,
OMR Thoraipakkam,
Chennai 600 097, India
**hello@verified.realestate**
+91 9996 12 9996

Prepared from the registers named on the page each finding sits on. Where a register could not be read, this document says so in its place rather than leaving the gap to be read as a clean result.